1142 Kingpinless Caster (B Type) Series

VQPU (brown round) Wheel Diameter x Wheel Width 150 x 42mm

EAN

KS-11420600542121

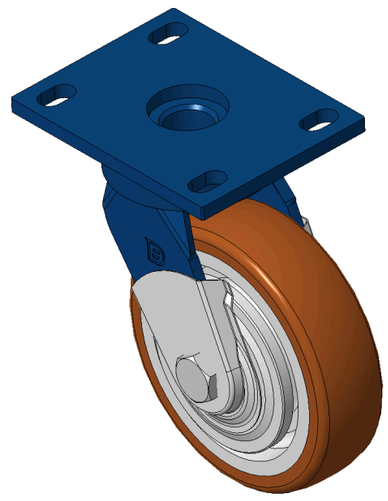

Picture may differ from original product

Drawings are for reference only and may differ from the product

Technical Data

◉ Metric ○ Imperial

Wheel Diameter	150mm
Wheel Width	42mm
Wheel Bearing	Wheels With Ball Bearings
Plate Size	140 x 110mm
Bolt Hole Spacing	110x75mm
Plate Hole	22 x 13mm
Offset	42mm
Swivel Interference	240mm
Overall Height	197mm
Swivel Radius	120mm
Hardness Of Tread	92±5° Shore A
Load Capacity (Dynamic)	670kgs
Load Capacity (Static)	1005kgs
Temperature	-20°C to +70°C
Fork Type	Swivel Caster
Stainless	N/A
Electrical Conductivity	N/A
Anti-Static	N/A
Weight	5.04kgs
Standard	ISO22883

Advantages at a glance

Rolling Resistance	●●●●●
Operating Noise	●●●●●
Floor Surface Preservation	●●●●●

Dimensions

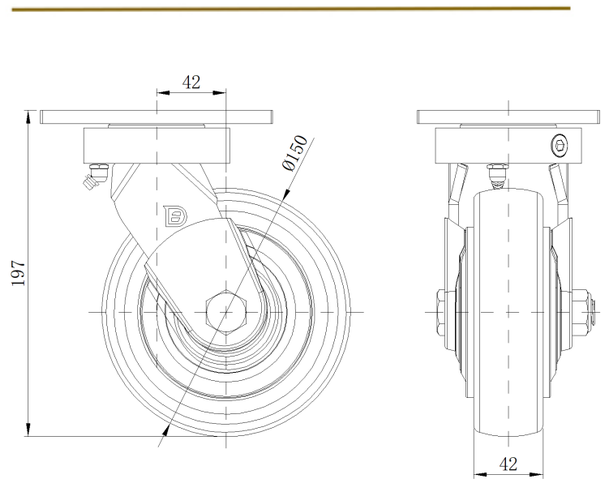

Mounting

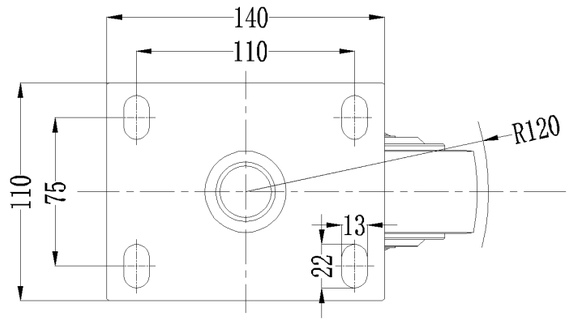

* For any deviation between metric and imperial spec, please refer to the metric spec.

© Copyright 2026 DershengInternational www.dersheng.com