# 1142 Kingpinless Caster (B Type) Series

VQPU (brown round) Wheel Diameter x Wheel Width 150 x 42mm

EAN

KS-11420600544161

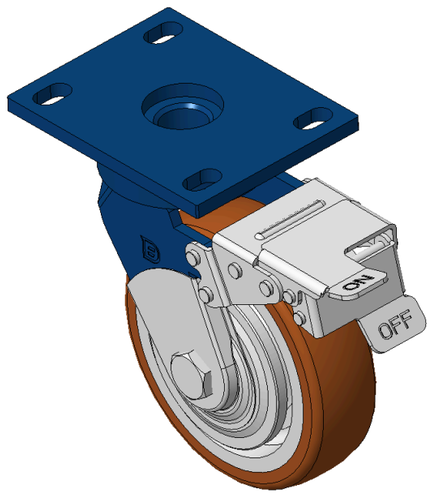


Picture may differ from original product

Drawings are for reference only and may differ from the product

## Technical Data

◉ Imperial ○ Metric

| | |
|---|---|
| Wheel Diameter | 6 " |
| Wheel Width | 1-11/16 " |
| Wheel Bearing | Wheels With Ball Bearings |
| Plate Size | 5-9/16 " x 4-3/8 " |
| Bolt Hole Spacing | 4-5/16 " x3” |
| Plate Hole | 9/16 " x 7/8 " |
| Offset | 1-11/16 " |
| Swivel Interference | 12-11/16 " |
| Overall Height | 7-7/8 " |
| Swivel Radius | 6-3/8 " |
| Hardness Of Tread | 92±5° Shore A |
| Load Capacity (Dynamic) | 1477lbs |
| Load Capacity (Static) | 2216lbs |
| Temperature | -4°F to +158°F |
| Fork Type | Swivel Caster With Front Brake |
| Stainless | N/A |
| Electrical Conductivity | N/A |
| Anti-Static | N/A |
| Weight | 11.8lbs |
| Standard | ISO22883 |

## Advantages at a glance

| | |
|---|---|
| Rolling Resistance | ●●●●● |
| Operating Noise | ●●●●● |
| Floor Surface Preservation | ●●●●● |

## Dimensions

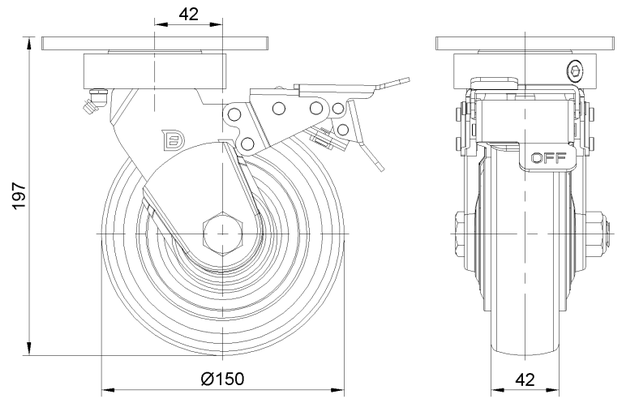


## Mounting

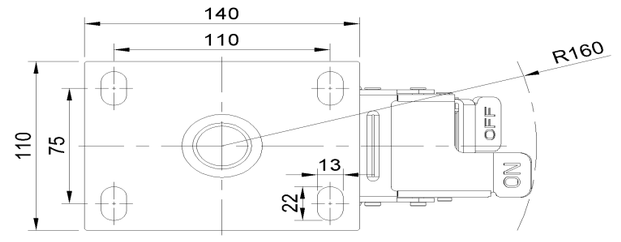


* For any deviation between metric and imperial spec, please refer to the metric spec.

© Copyright 2026 DershengInternational www.dersheng.com