# 1142 Kingpinless Caster (B Type) Series

MRC Wheel (Transparent) Wheel Diameter × Wheel Width 200 × 50mm

EAN

KS-11420800072011

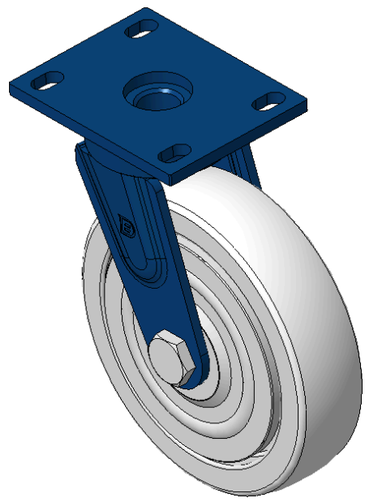

Picture may differ from original product

Drawings are for reference only and may differ from the product

## Technical Data

◉ Metric ○ Imperial

| | |
|---|---|
| Wheel Diameter | 200mm |
| Wheel Width | 50mm |
| Wheel Bearing | Wheels With Ball Bearings |
| Plate Size | 140 x 110mm |
| Bolt Hole Spacing | 110x75mm |
| Plate Hole | 22 x 13mm |
| Offset | 47mm |
| Swivel Interference | 300mm |
| Overall Height | 248mm |
| Swivel Radius | 150mm |
| Hardness Of Tread | 75±5° Shore D |
| Load Capacity (Dynamic) | 450kgs |
| Load Capacity (Static) | 675kgs |
| Temperature | -20°C to +80°C |
| Fork Type | Swivel Caster |
| Stainless | N/A |
| Electrical Conductivity | N/A |
| Anti-Static | N/A |
| Weight | 4.53kgs |
| Standard | ISO22883 |

## Advantages at a glance

| | |
|---|---|
| Rolling Resistance | ●●●●● |
| Operating Noise | ●●○○○ |
| Floor Surface Preservation | ●●○○○ |

## Dimensions

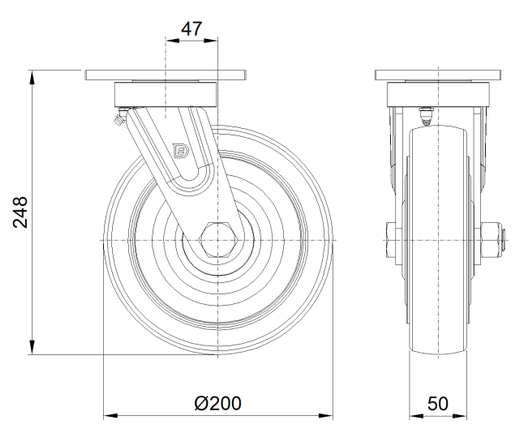


## Mounting

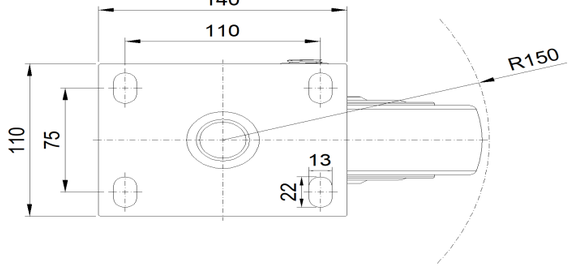


* For any deviation between metric and imperial spec, please refer to the metric spec.

© Copyright 2026 DershengInternational www.dersheng.com