1142 Kingpinless Caster (B Type) Series

EQPU (brown round) Wheel Diameter x Wheel Width 200 x 50mm

EAN

KS-11420800554111

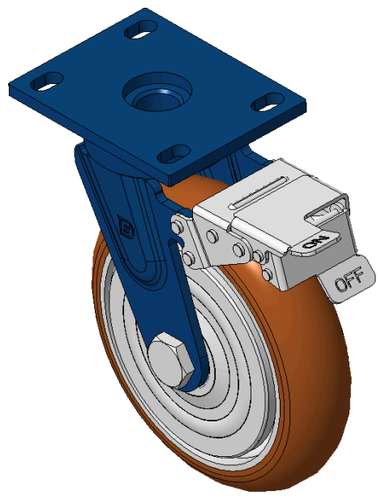

Picture may differ from original product

Drawings are for reference only and may differ from the product

Technical Data

◉ Metric ○ Imperial

Wheel Diameter	200mm
Wheel Width	50mm
Wheel Bearing	Wheels With Ball Bearings
Plate Size	140 x 110mm
Bolt Hole Spacing	110x75mm
Plate Hole	22 x 13mm
Offset	47mm
Swivel Interference	342mm
Overall Height	248mm
Swivel Radius	171mm
Hardness Of Tread	92±5° Shore A
Load Capacity (Dynamic)	750kgs
Load Capacity (Static)	1125kgs
Temperature	-20°C to +70°C
Fork Type	Swivel Caster With Front Brake
Stainless	N/A
Electrical Conductivity	N/A
Anti-Static	N/A
Weight	6.60kgs
Standard	ISO22883

Advantages at a glance

Rolling Resistance	●●●●●
Operating Noise	●●●●●
Floor Surface Preservation	●●●●●

Dimensions

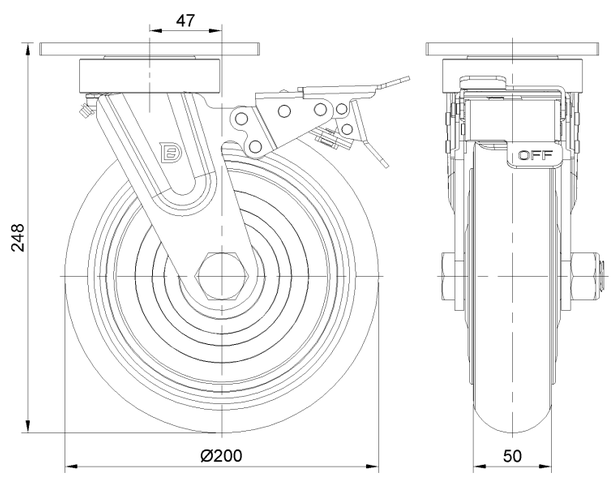

Mounting

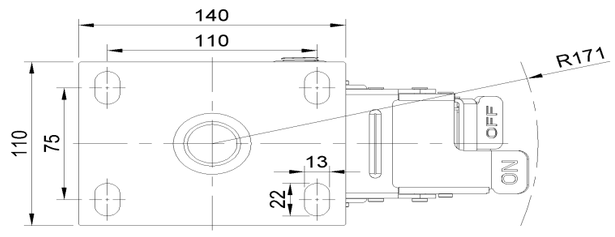

* For any deviation between metric and imperial spec, please refer to the metric spec.

© Copyright 2026 DershengInternational www.dersheng.com