1142 Kingpinless Caster (B Type) Series

EQPU (brown round) Wheel Diameter x Wheel Width 200 x 50mm

EAN

KS-11420800554111

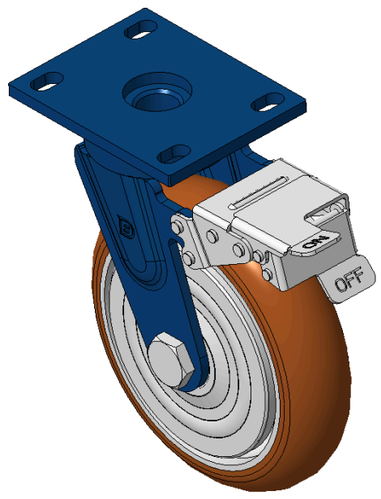

Picture may differ from original product

Drawings are for reference only and may differ from the product

Technical Data

◉ Imperial ○ Metric

Wheel Diameter	8 "
Wheel Width	2 "
Wheel Bearing	Wheels With Ball Bearings
Plate Size	5-9/16 " x 4-3/8 "
Bolt Hole Spacing	4-5/16 " x3”
Plate Hole	9/16 " x 7/8 "
Offset	1-7/8 "
Swivel Interference	13-1/2 "
Overall Height	9-15/16 "
Swivel Radius	6-13/16 "
Hardness Of Tread	92±5° Shore A
Load Capacity (Dynamic)	1653lbs
Load Capacity (Static)	2480lbs
Temperature	-4°F to +158°F
Fork Type	Swivel Caster With Front Brake
Stainless	N/A
Electrical Conductivity	N/A
Anti-Static	N/A
Weight	14.6lbs
Standard	ISO22883

Advantages at a glance

Rolling Resistance	●●●●●
Operating Noise	●●●●●
Floor Surface Preservation	●●●●●

Dimensions

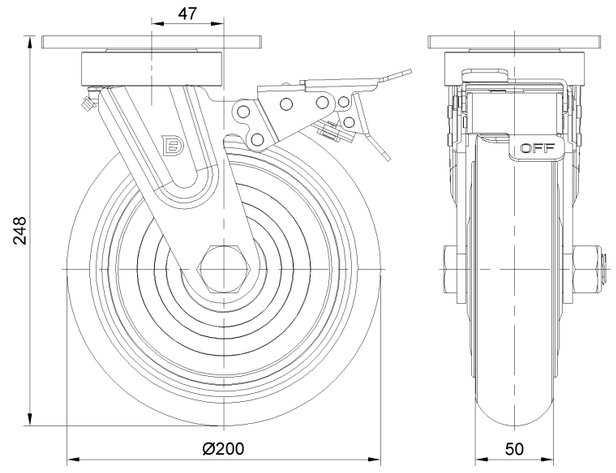

Mounting

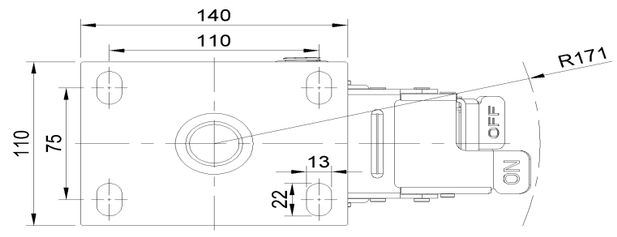

* For any deviation between metric and imperial spec, please refer to the metric spec.

© Copyright 2026 DershengInternational www.dersheng.com