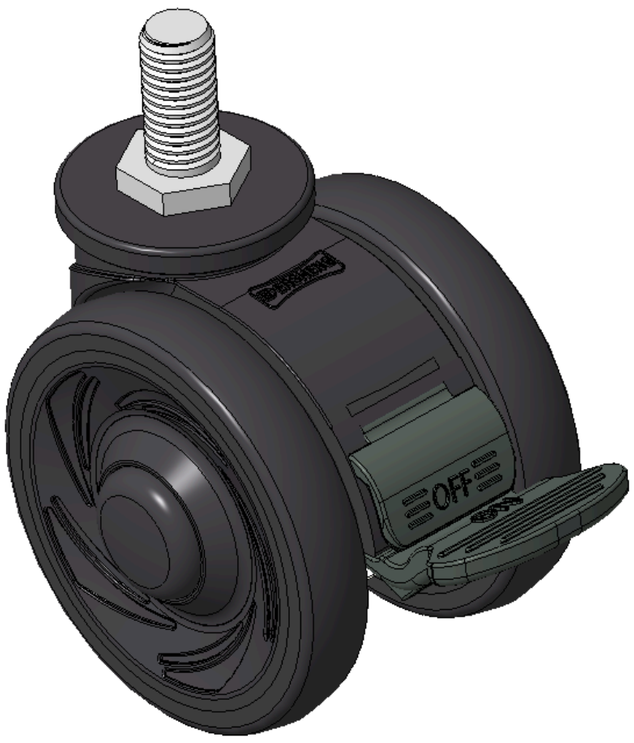

Picture may differ from original product


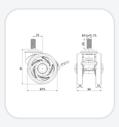
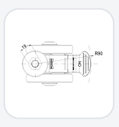

1146 46 Ascendant Series Caster Series(All Plastic)

Double-Ball Full-Effect Wheel (All-Black) Wheel Diameter × Wheel Width 75 × 14mm

KS-11460300266033 Copy model no.

Wheel Diameter	Load Capacity (Dynamic)	Overall Height	Wheel Bearing
75mm	**90kgs**	**84mm**	**Wheels With Ball Bearings**

Product descriptions are for reference only. The actual product shall prevail.

Product Data Sheet

Wheel Diameter	**75mm**	Wheel Width	**60mm**
Wheel Bearing	**Wheels With Ball Bearings**	Threaded Stem	**M12**
Threaded Length	**25mm**	Offset	**23mm**
Swivel Interference	**180mm**	Overall Height	**84mm**
Swivel Radius	**90mm**	Hardness Of Tread	**82±5° Shore A**
Load Capacity (Dynamic)	**90kgs**	Load Capacity (Static)	**130kgs**
Temperature	**-20°C to +60°C**	Fork Type	**Swivel Caster With Total Brake**
Stainless	**N/A**	Electrical Conductivity	**N/A**
Anti-Static	**N/A**	Weight	**0.26kgs**
Standard	**ISO22881**		

* For any deviation between metric and imperial spec, please refer to the metric spec.

Performance

Rolling Resistance ●●●●○	Operating Noise ●●●●○	Floor Surface Preservation ●●●●●

© 2026 DERSHENG CO., LTD. All rights reserved.