1146 46 Ascendant Series Caster Series(All Plastic)

Double-Ball Full-Effect Wheel (All-Black) Wheel Diameter × Wheel Width 75 × 14mm

EAN

KS-11460300455313

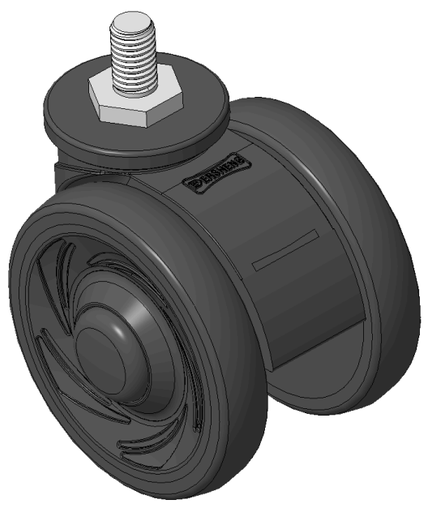

Drawings are for reference only and may differ from the product

Picture may differ from original product

Technical Data

◉ Metric ○ Imperial

Wheel Diameter	75mm
Wheel Width	60mm
Wheel Bearing	Wheels With Ball Bearings
Threaded Stem	M10
Threaded Length	17mm
Offset	23mm
Swivel Interference	134mm
Overall Height	84mm
Swivel Radius	67mm
Hardness Of Tread	72±5° Shore A
Load Capacity (Dynamic)	90kgs
Load Capacity (Static)	135kgs
Temperature	-20°C to +60°C
Fork Type	Swivel Caster
Stainless	N/A
Electrical Conductivity	N/A
Anti-Static	N/A
Weight	0.25kgs
Standard	ISO22881

Advantages at a glance

Rolling Resistance	●●●●●
Operating Noise	●●●●●
Floor Surface Preservation	●●●●●

Dimensions

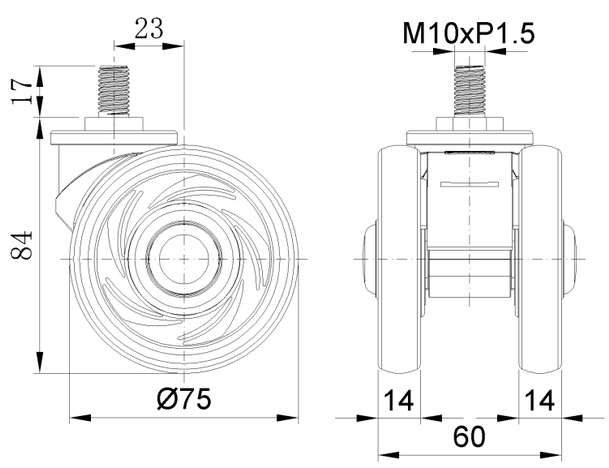

Mounting

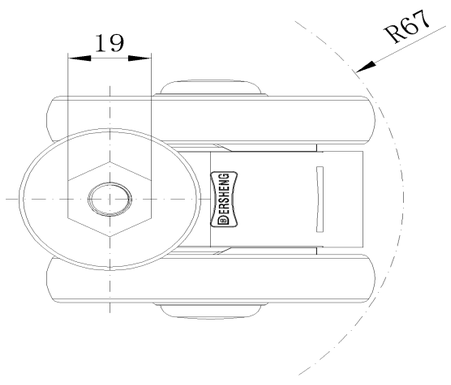

* For any deviation between metric and imperial spec, please refer to the metric spec.

© Copyright 2026 DershengInternational www.dersheng.com