1146 46 Ascendant Series Caster Series(All Plastic)

Classic Double-Ball Full-Effect Wheel (White-Dark Gray) Wheel Diameter × Wheel Width 75 × 14mm

EAN

KS-11460391454023

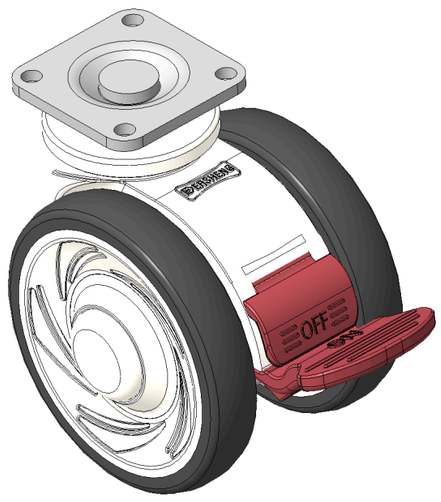

Drawings are for reference only and may differ from the product

Picture may differ from original product

Technical Data

◉ Metric ○ Imperial

Wheel Diameter	75mm
Wheel Width	60mm
Wheel Bearing	Wheels With Ball Bearings
Plate Size	42 x 42mm
Bolt Hole Spacing	32x32mm
Plate Hole	5mm
Offset	23mm
Swivel Interference	179mm
Overall Height	90mm
Swivel Radius	89.5mm
Hardness Of Tread	72±5° Shore A
Load Capacity (Dynamic)	90kgs
Load Capacity (Static)	135kgs
Temperature	-20°C to +60°C
Fork Type	Swivel Caster With Total Brake
Stainless	N/A
Electrical Conductivity	N/A
Anti-Static	N/A
Weight	0.28kgs
Standard	ISO22881

Advantages at a glance

Rolling Resistance	●●●●●
Operating Noise	●●●●●
Floor Surface Preservation	●●●●●

Dimensions

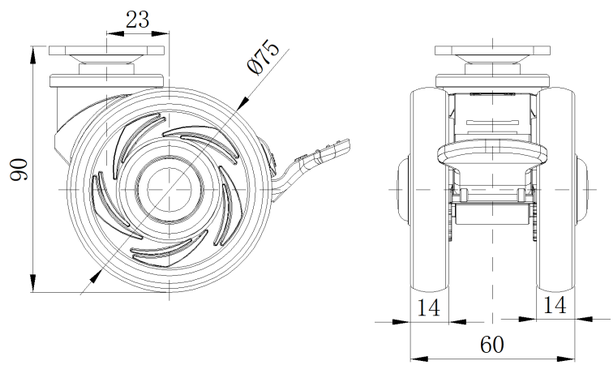

Mounting

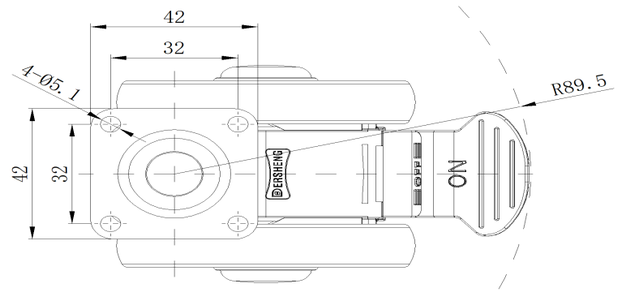

* For any deviation between metric and imperial spec, please refer to the metric spec.

© Copyright 2026 DershengInternational www.dersheng.com