Product Data Sheet

1146 46 Ascendant Series Caster Series(All Plastic)

Resolute Rubber wheel (window gray dark gray) Wheel Diameter x Wheel Width 100 x 18mm

EAN

KS-11460400455133

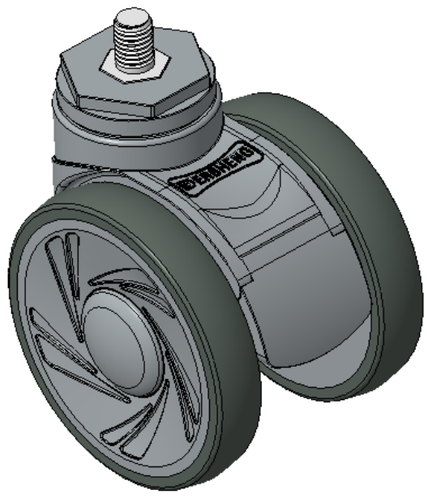

Adjustable Casters, Threaded Stem M12x17
Window gray Casters made of polypropylene reinforced material
Rust-proof, Corrosion resistant, Attractive appearance, Economical, and rotates smoothly
High-Quality Impact-Resistant Polypropylene Wheel Center, High-Quality Reinforced Polypropylene Rubber (TPR) Wheel Tread
Dark gray, Bearing—Ball Bearings

Wheel tread: Thermoplastic rubber elastomer (TPR)
Wheel Center: Made of high-quality impact-resistant polypropylene

Drawings are for reference only and may differ from the product

Picture may differ from original product

Technical Data

◉ Metric ○ Imperial

Wheel Diameter	100mm
Wheel Width	85.5mm
Wheel Bearing	Wheels With Ball Bearings
Threaded Stem	M12
Threaded Length	17mm
Offset	32mm
Swivel Interference	182mm
Overall Height	120mm
Swivel Radius	91mm
Hardness Of Tread	72±5° Shore A
Load Capacity (Dynamic)	100kgs
Load Capacity (Static)	150kgs
Temperature	-20°C to +60°C
Fork Type	Swivel Caster
Stainless	N/A
Electrical Conductivity	N/A
Anti-Static	N/A
Weight	0.62kgs
Standard	ISO22881

Advantages at a glance

Rolling Resistance	●●●●●
Operating Noise	●●●●●
Floor Surface Preservation	●●●●●

Dimensions

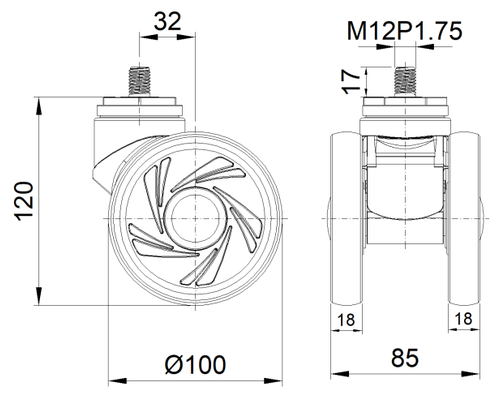

Mounting

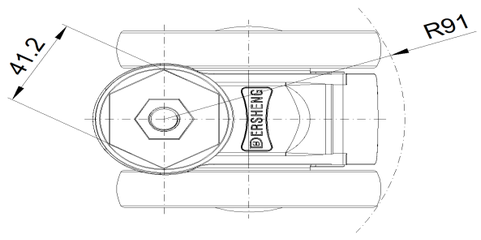

* For any deviation between metric and imperial spec, please refer to the metric spec.

© Copyright 2026 DershengInternational www.dersheng.com