1146 46 Ascendant Series Caster Series(All Plastic)

Resolute Rubber wheel (window gray dark gray) Wheel Diameter x Wheel Width 100 x 18mm

EAN

KS-11460400456553

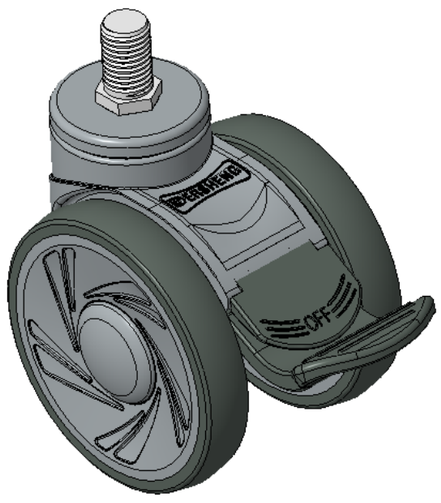

Picture may differ from original product

Drawings are for reference only and may differ from the product

Technical Data

◉ Metric ○ Imperial

Wheel Diameter	100mm
Wheel Width	85.5mm
Wheel Bearing	Wheels With Ball Bearings
Threaded Stem	M16
Threaded Length	25mm
Offset	32mm
Swivel Interference	250mm
Overall Height	120mm
Swivel Radius	125mm
Hardness Of Tread	72±5° Shore A
Load Capacity (Dynamic)	100kgs
Load Capacity (Static)	150kgs
Temperature	-20°C to +60°C
Fork Type	Swivel Caster With Total Brake
Stainless	N/A
Electrical Conductivity	N/A
Anti-Static	N/A
Weight	0.76kgs
Standard	ISO22881

Advantages at a glance

Rolling Resistance	●●●●●
Operating Noise	●●●●●
Floor Surface Preservation	●●●●●

Dimensions

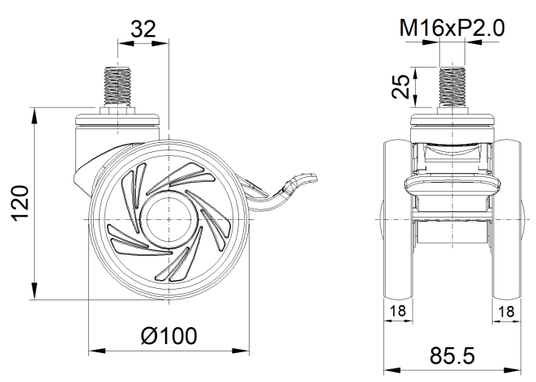

Mounting

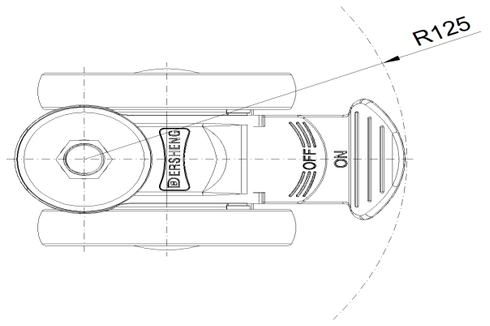

* For any deviation between metric and imperial spec, please refer to the metric spec.

© Copyright 2026 DershengInternational www.dersheng.com