1146 46 Ascendant Series Caster Series(All Plastic)

Classic Double-Ball Full-Effect Wheel (White-Dark Gray) Wheel Diameter × Wheel Width 100 × 14mm

EAN

KS-11460491456013

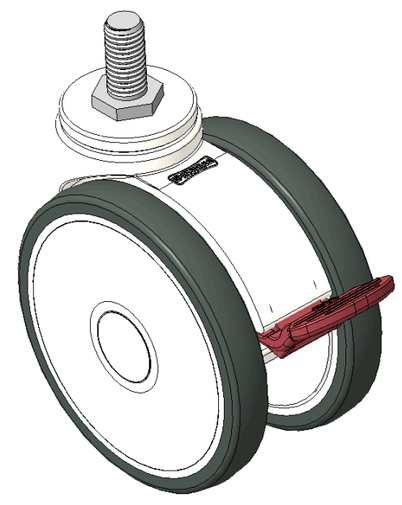

Drawings are for reference only and may differ from the product

Picture may differ from original product

Technical Data

◉ Metric ○ Imperial

Wheel Diameter	100mm
Wheel Width	60mm
Wheel Bearing	Wheels With Ball Bearings
Threaded Stem	M12
Threaded Length	25mm
Offset	28mm
Swivel Interference	205mm
Overall Height	115mm
Swivel Radius	102.5mm
Hardness Of Tread	72±5° Shore A
Load Capacity (Dynamic)	90kgs
Load Capacity (Static)	135kgs
Temperature	-20°C to +60°C
Fork Type	Swivel Caster With Total Brake
Stainless	N/A
Electrical Conductivity	N/A
Anti-Static	N/A
Weight	0.39kgs
Standard	ISO22881

Advantages at a glance

Rolling Resistance	●●●●●
Operating Noise	●●●●●
Floor Surface Preservation	●●●●●

Dimensions

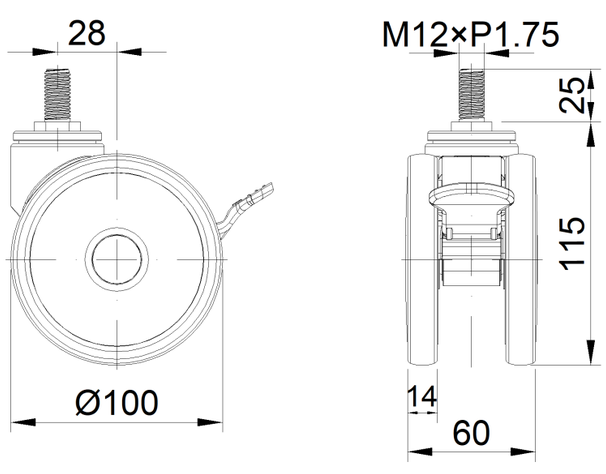

Mounting

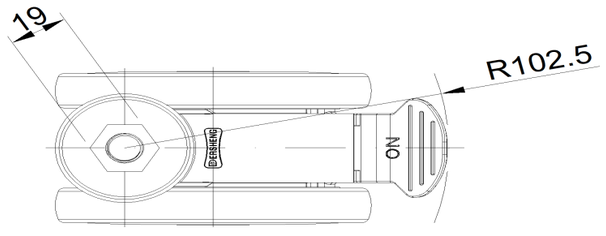

* For any deviation between metric and imperial spec, please refer to the metric spec.

© Copyright 2026 DershengInternational www.dersheng.com