1146 46 Ascendant Series Caster Series(All Plastic)

Double-Ball Full-Effect Wheel (Window Gray-Dark Gray with Large Wheel Cover) Wheel Diameter × Wheel

EAN

KS-11460500455873

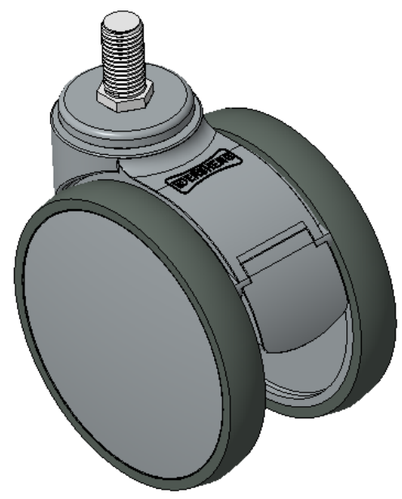

Picture may differ from original product

Drawings are for reference only and may differ from the product

Technical Data

◉ Imperial ○ Metric

Wheel Diameter	5 "
Wheel Width	3-1/4
Wheel Bearing	Wheels With Ball Bearings
Threaded Stem	M16
Threaded Length	1 "
Offset	1-5/8 "
Swivel Interference	8-3/4 "
Overall Height	5-9/16 "
Swivel Radius	4-3/8 "
Hardness Of Tread	72±5° Shore A
Load Capacity (Dynamic)	243lbs
Load Capacity (Static)	364lbs
Temperature	-4°F to +140°F
Fork Type	Swivel Caster
Stainless	N/A
Electrical Conductivity	N/A
Anti-Static	N/A
Weight	1.5lbs
Standard	ISO22881

Advantages at a glance

Rolling Resistance	●●●●●
Operating Noise	●●●●●
Floor Surface Preservation	●●●●●

Dimensions

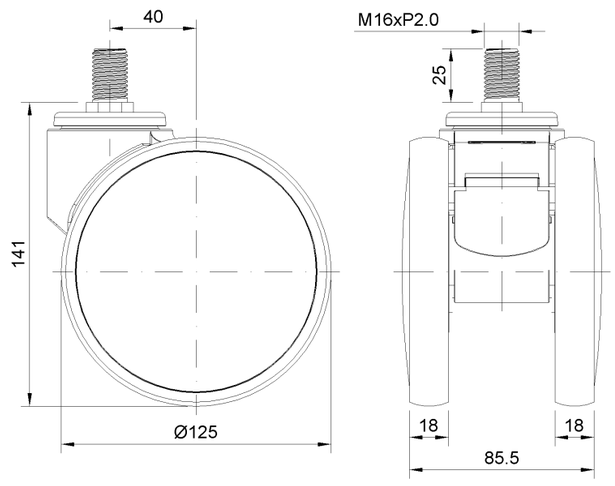

Mounting

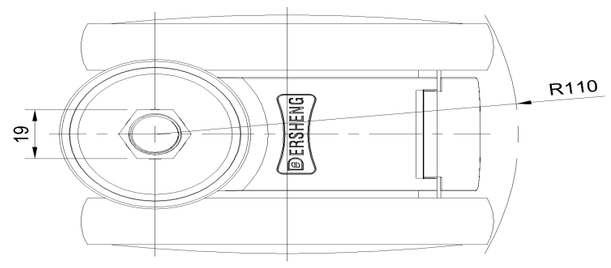

* For any deviation between metric and imperial spec, please refer to the metric spec.

© Copyright 2026 DershengInternational www.dersheng.com