1146 46 Ascendant Series Caster Series(All Plastic)

Double-Ball Full-Effect Wheel (White-Dark Gray) Wheel Diameter × Wheel Width 125 × 18mm

EAN

KS-11460500456323

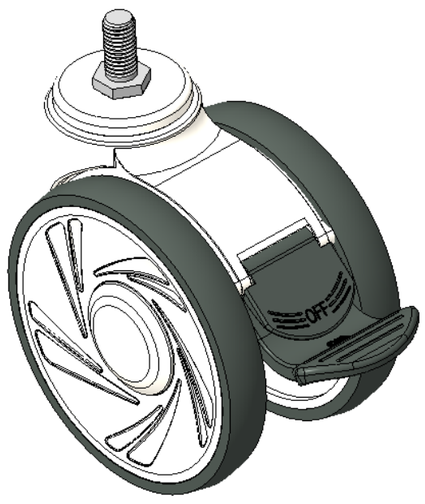

Drawings are for reference only and may differ from the product

Picture may differ from original product

Technical Data

◉ Imperial ○ Metric

Wheel Diameter	5 "
Wheel Width	3-3/8 "
Wheel Bearing	Wheels With Ball Bearings
Threaded Stem	M12
Threaded Length	1 "
Offset	1-5/8 "
Swivel Interference	11-3/16 "
Overall Height	5-3/4 "
Swivel Radius	5-9/16 "
Hardness Of Tread	72±5° Shore A
Load Capacity (Dynamic)	243lbs
Load Capacity (Static)	364lbs
Temperature	-4°F to +140°F
Fork Type	Swivel Caster With Total Brake
Stainless	N/A
Electrical Conductivity	N/A
Anti-Static	N/A
Weight	1.6lbs
Standard	ISO22881

Advantages at a glance

Rolling Resistance	●●●●●
Operating Noise	●●●●●
Floor Surface Preservation	●●●●●

Dimensions

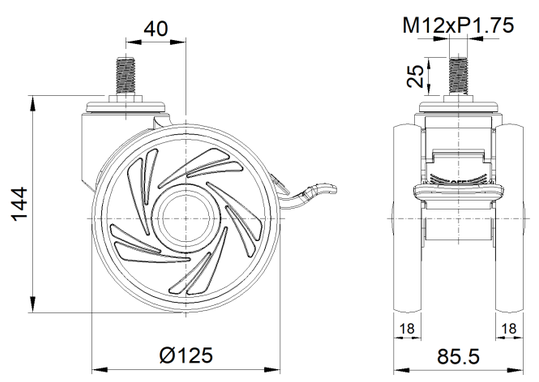

Mounting

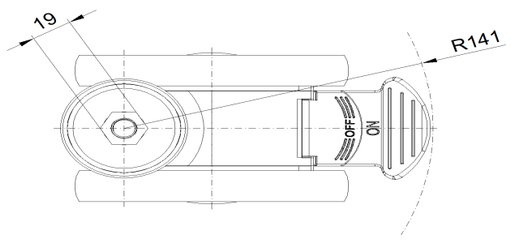

* For any deviation between metric and imperial spec, please refer to the metric spec.

© Copyright 2026 DershengInternational www.dersheng.com