Product Data Sheet

1147 Universal (Single) Spring Wheel Series

PU (red round) Wheel Diameter x Wheel Width 150x 42mm

EAN

KS-11470600332211

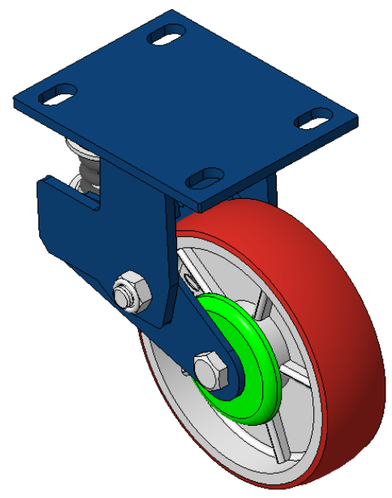

Picture may differ from original product

Rigid Spring-loaded Caster with Welded Caster Fork Blue painted finish, Mounting Type - Top Plate, 110x75 Bolt Hole Spacing Cast Iron core with High Quality Polyurethane Wheel Tread Red Cast Iron finish, Bearing – Ball Bearings

Wheel tread: Made of high-quality polyurethane

Wheel Center: iron core/cast iron core

Drawings are for reference only and may differ from the product

Technical Data

◉ Metric ○ Imperial

Wheel Diameter	150mm
Wheel Width	42mm
Wheel Bearing	Wheels With Ball Bearings
Plate Size	140 x 110mm
Bolt Hole Spacing	110x75mm
Plate Hole	23 x 13mm
Overall Height	198mm
Hardness Of Tread	92±5° Shore A
Load Capacity (Dynamic)	410kgs
Load Capacity (Static)	615kgs
Temperature	-20°C to +70°C
Fork Type	Rigid Caster
Stainless	N/A
Electrical Conductivity	N/A
Anti-Static	N/A
Weight	4.02kgs
Standard	ISO22883

Advantages at a glance

Rolling Resistance	● ● ● ○ ○
Operating Noise	● ● ● ● ○
Floor Surface Preservation	● ● ● ● ○

Dimensions

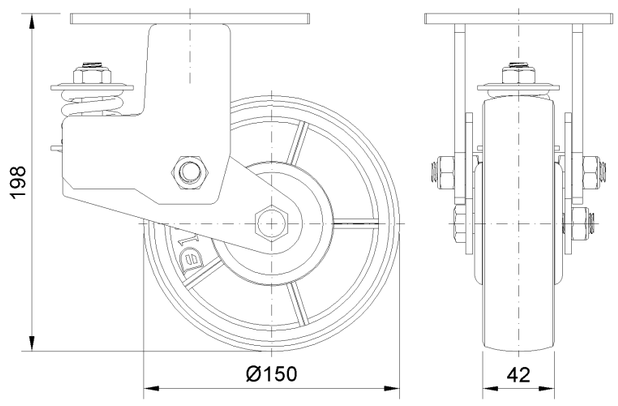

Mounting

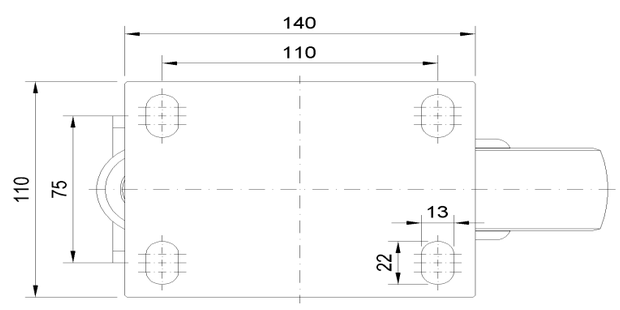

* For any deviation between metric and imperial spec, please refer to the metric spec.

© Copyright 2025 DershengInternational www.dersheng.com