Product Data Sheet

1147 Universal (Single) Spring Wheel Series

VQPU (brown round) Wheel Diameter x Wheel Width 150 x 42mm

EAN

KS-11470600542211

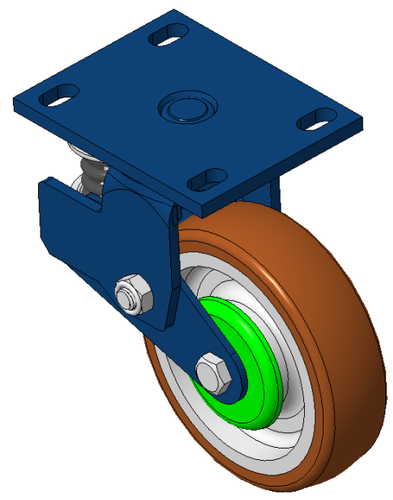

Picture may differ from original product

Swivel Spring-loaded Caster with Welded Caster Fork
Blue painted finish, Mounting Type - Top Plate, 110x75 Bolt Hole Spacing
Cast Iron core with High Quality Polyurethane Wheel Tread
Cast Iron brown, Bearing – Ball Bearings

Wheel tread: Made of high-quality polyurethane
Wheel Center: iron core/cast iron core

Drawings are for reference only and may differ from the product

Technical Data

◉ Metric ○ Imperial

Wheel Diameter	150mm
Wheel Width	42mm
Wheel Bearing	Wheels With Ball Bearings
Plate Size	140 x 110mm
Bolt Hole Spacing	110x75mm
Plate Hole	2313mm
Offset	48mm
Swivel Interference	250mm
Overall Height	198mm
Swivel Radius	125mm
Hardness Of Tread	92±5° Shore A
Load Capacity (Dynamic)	670kgs
Load Capacity (Static)	1005kgs
Temperature	-20°C to +70°C
Fork Type	Swivel Caster
Stainless	N/A
Electrical Conductivity	N/A
Anti-Static	N/A
Weight	5.35kgs
Standard	ISO22883

Advantages at a glance

Rolling Resistance	● ● ● ● ●
Operating Noise	● ● ● ● ●
Floor Surface Preservation	● ● ● ● ●

Dimensions

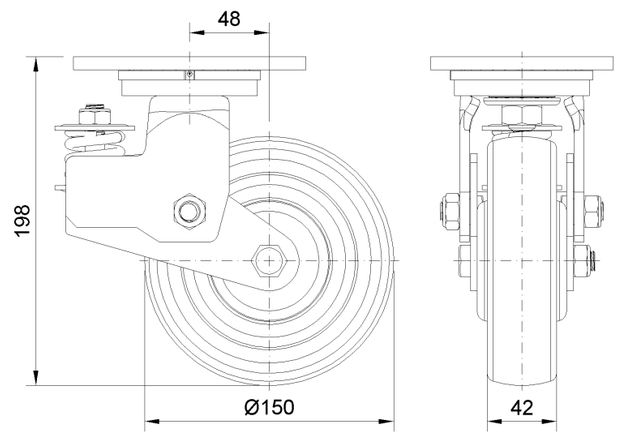

Mounting

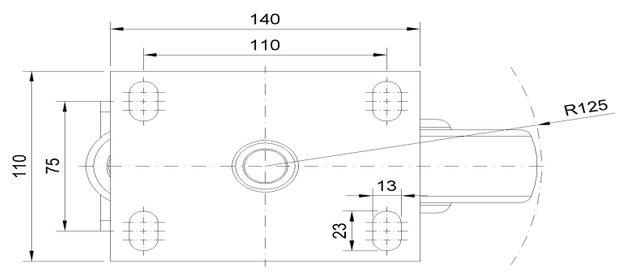

* For any deviation between metric and imperial spec, please refer to the metric spec.

© Copyright 2025 DershengInternational www.dersheng.com