Product Data Sheet

1151 51 European Standard Base Plate Series

W Resolute (black, dark gray) Wheel Diameter × Wheel Width 125 x 38mm

EAN

KS-11510500452623

YJ-11510500452023

Portable Casters, Riveted and Stamping Top Plate brackets — 44.5 x 30mm (1-3/4" x 1-1/8") Bolt Hole Spacings
Zine-Plated surface, Top Plate type (4T) Mounting Type device
Reinforced impact-resistant polypropylene Wheel Center, High-Quality Reinforced Polypropylene Rubber (TPR) Wheel Tread
Dark gray, Bearing — Ball Bearings.

Wheel tread: Thermoplastic rubber elastomer (TPR)

Wheel Center: Made of high-quality impact-resistant polypropylene

Drawings are for reference only and may differ from the product

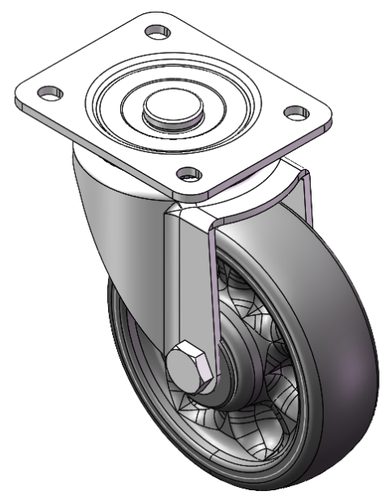

Picture may differ from original product

Technical Data

◉ Metric ○ Imperial

Wheel Diameter	125mm
Wheel Width	38mm
Wheel Bearing	Wheels With Ball Bearings
Plate Size	105 x 85mm
Bolt Hole Spacing	80 x 60mm
Plate Hole	10.5 x 9mm
Offset	40mm
Swivel Interference	205mm
Overall Height	155mm
Swivel Radius	102.5mm
Hardness Of Tread	72±5° Shore A
Load Capacity (Dynamic)	160kgs
Load Capacity (Static)	240kgs
Temperature	-20°C to +60°C
Fork Type	Swivel Caster
Stainless	N/A
Electrical Conductivity	N/A
Anti-Static	N/A
Weight	1.17kgs
Standard	ISO22883

Advantages at a glance

Rolling Resistance	● ● ● ● ●
Operating Noise	● ● ● ● ●
Floor Surface Preservation	● ● ● ● ●

Dimensions

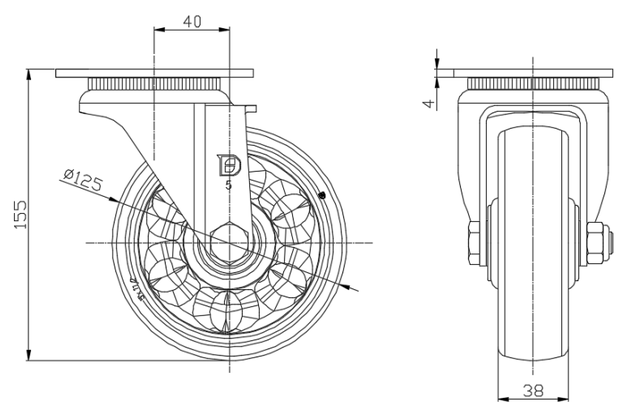

Mounting

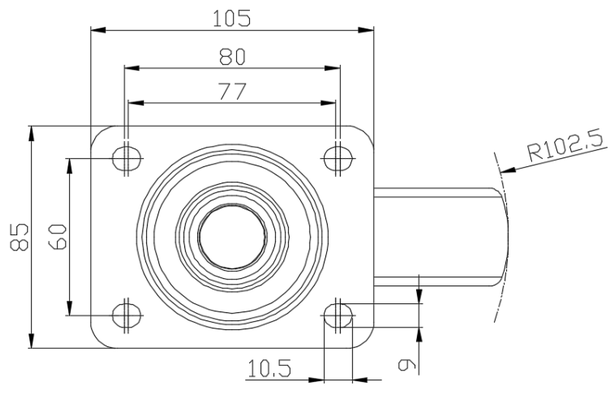

* For any deviation between metric and imperial spec, please refer to the metric spec.

© Copyright 2025 DershengInternational www.dersheng.com