Product Data Sheet

1151 51 European Standard Base Plate Series

W Resolute (black, dark gray) Wheel Diameter × Wheel Width 125 x 38mm

EAN

KS-11510500452623

YJ-11510500452023

Portable Casters, Riveted and Stamping Top Plate brackets — 44.5 x 30mm (1-3/4" x 1-1/8") Bolt Hole Spacings
Zine-Plated surface, Top Plate type (4T) Mounting Type device
Reinforced impact-resistant polypropylene Wheel Center, High-Quality Reinforced Polypropylene Rubber (TPR) Wheel Tread
Dark gray, Bearing — Ball Bearings.

Wheel tread: Thermoplastic rubber elastomer (TPR)

Wheel Center: Made of high-quality impact-resistant polypropylene

Drawings are for reference only and may differ from the product

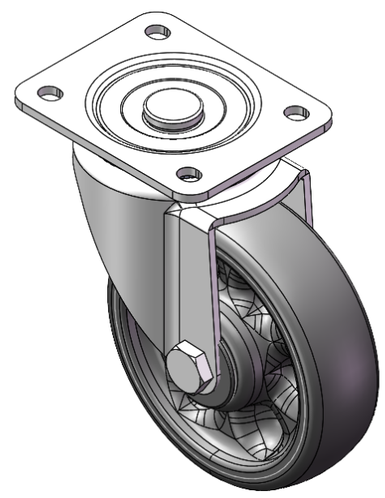

Picture may differ from original product

Technical Data

◉ Imperial ○ Metric

Wheel Diameter	5 "
Wheel Width	1-1/2 "
Wheel Bearing	Wheels With Ball Bearings
Plate Size	4-3/16 " x 3-7/16 "
Bolt Hole Spacing	3-3/16 " x 2-7/16 "
Plate Hole	3/8 " x 23/64 "
Offset	1-5/8 "
Swivel Interference	8-1/8 "
Overall Height	6-1/8 "
Swivel Radius	4-1/16 "
Hardness Of Tread	72±5° Shore A
Load Capacity (Dynamic)	353lbs
Load Capacity (Static)	529lbs
Temperature	-4°F to +140°F
Fork Type	Swivel Caster
Stainless	N/A
Electrical Conductivity	N/A
Anti-Static	N/A
Weight	2.6lbs
Standard	ISO22883

Advantages at a glance

Rolling Resistance	● ● ● ● ●
Operating Noise	● ● ● ● ●
Floor Surface Preservation	● ● ● ● ●

Dimensions

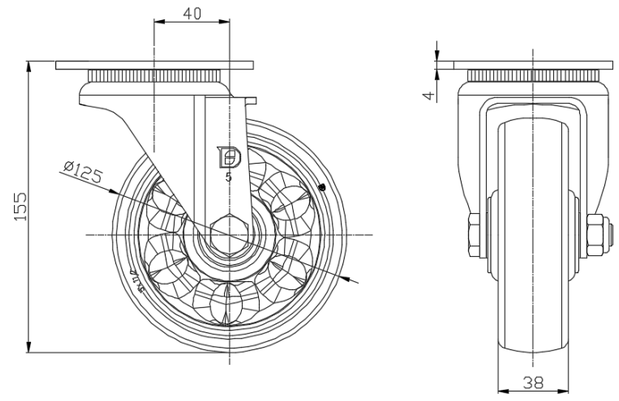

Mounting

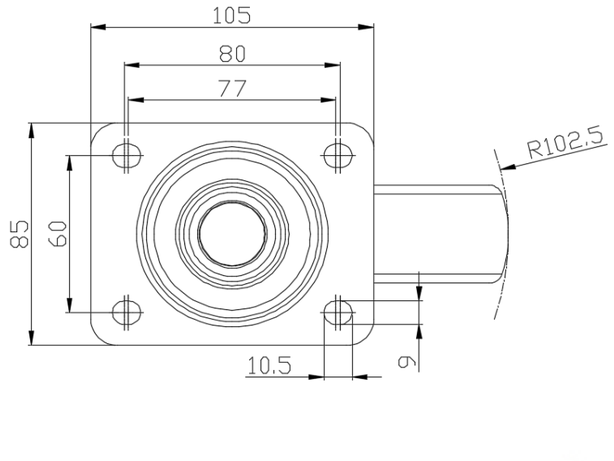

* For any deviation between metric and imperial spec, please refer to the metric spec.

© Copyright 2025 DershengInternational www.dersheng.com