Product Data Sheet

# 1152 Anti-Friction Caster (B Type) Series

PU (red round) Wheel Diameter x Wheel Width 150x 42mm

EAN

KS-11520600332331

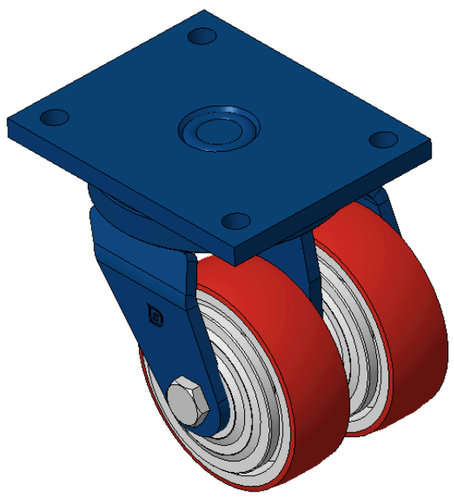

Picture may differ from original product

Portable Casters, Welded Caster Fork, blue painted finish
Base plate Mounting Type device, 140x105mm Bolt Hole Spacing
Cast Iron Wheel Center, High Quality Polyurethane Wheel Tread, Cast Iron red
Bearings—Ball Bearings

Wheel Tread: Hhigh-Quality Polyurethane
Wheel Center: Iron core / Cast iron core

Drawings are for reference only and may differ from the product

## Technical Data

◉ Metric ○ Imperial

| | |
|---|---|
| Wheel Diameter | 150mm |
| Wheel Width | 42mm |
| Wheel Bearing | Wheels With Ball Bearings |
| Plate Size | 175 x 140mm |
| Bolt Hole Spacing | 140x105mm |
| Plate Hole | 15mm |
| Offset | 55mm |
| Swivel Interference | 214mm |
| Overall Height | 215mm |
| Swivel Radius | 107mm |
| Hardness Of Tread | 93±5° Shore A |
| Load Capacity (Dynamic) | 612kgs |
| Load Capacity (Static) | 918kgs |
| Temperature | -20°C to +70°C |
| Fork Type | Swivel Caster |
| Stainless | N/A |
| Electrical Conductivity | N/A |
| Anti-Static | N/A |
| Weight | 9.75kgs |
| Standard | ISO22883 |

## Advantages at a glance

| | |
|---|---|
| Rolling Resistance | ○○○○○ |
| Operating Noise | ●●●●○ |
| Floor Surface Preservation | ●●●●○ |

## Dimensions

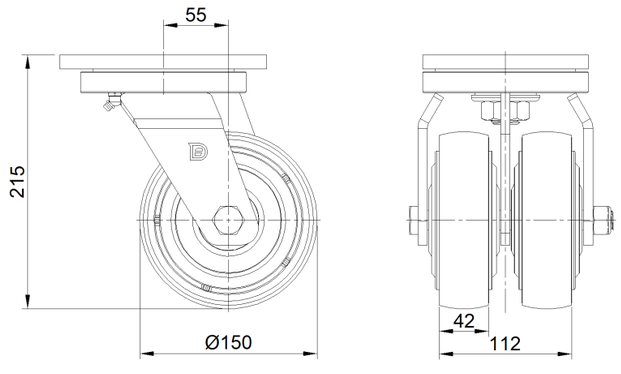


## Mounting

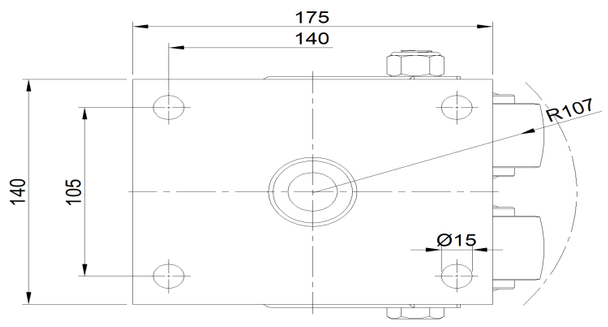


Drawings are for reference only and may differ from the product.

* For any deviation between metric and imperial spec, please refer to the metric spec.

© Copyright 2026 DershengInternational www.dersheng.com