1152 Anti-Friction Caster (B Type) Series

QPU (Brown flat) Wheel Diameter × Wheel Width 150 x 42mm

EAN

KS-11520600532061

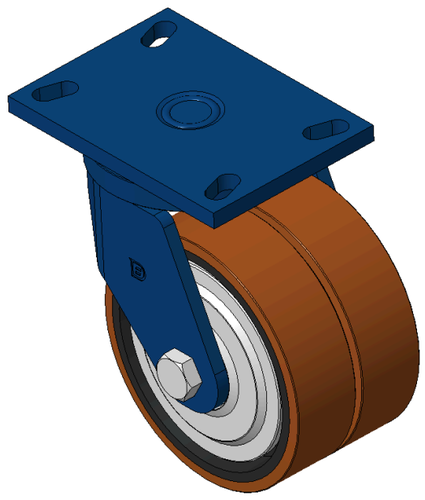

Picture may differ from original product

Drawings are for reference only and may differ from the product

Technical Data

◉ Imperial ○ Metric

Wheel Diameter	6 "
Wheel Width	1-11/16 "
Wheel Bearing	Wheels With Ball Bearings
Plate Size	4-1/2 " x 6-3/8 "
Bolt Hole Spacing	5-1/8 “x2-7/8”
Plate Hole	9/16 " x 1-1/16 "
Offset	1-15/16 "
Swivel Interference	10-3/8 "
Overall Height	7-9/16 "
Swivel Radius	5-3/16 "
Hardness Of Tread	92±5° Shore A
Load Capacity (Dynamic)	1323lbs
Load Capacity (Static)	1984lbs
Temperature	-4°F to +158°F
Fork Type	Swivel Caster
Stainless	N/A
Electrical Conductivity	N/A
Anti-Static	N/A
Weight	16.5lbs
Standard	ISO22883

Advantages at a glance

Rolling Resistance	●●●●●
Operating Noise	●●●●●
Floor Surface Preservation	●●●●●

Dimensions

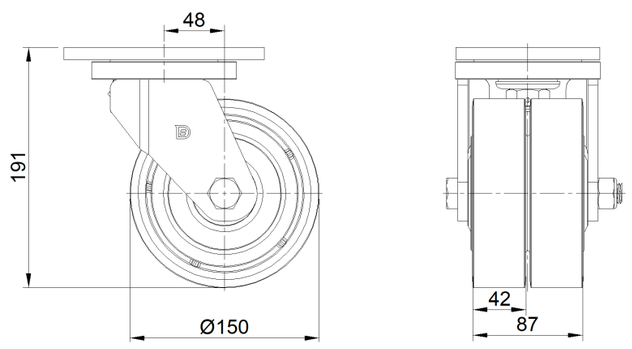

Mounting

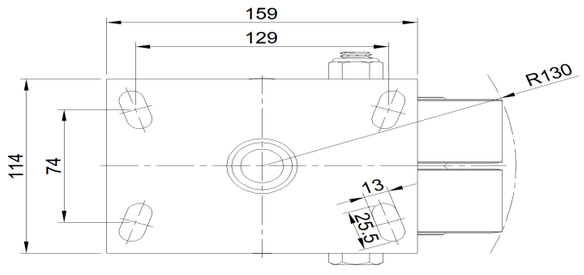

* For any deviation between metric and imperial spec, please refer to the metric spec.

© Copyright 2026 DershengInternational www.dersheng.com