1152 Anti-Friction Caster (B Type) Series

EQPU (Brown round) Wheel Diameter × Wheel Width 150 x 42mm

EAN

KS-11520600552061

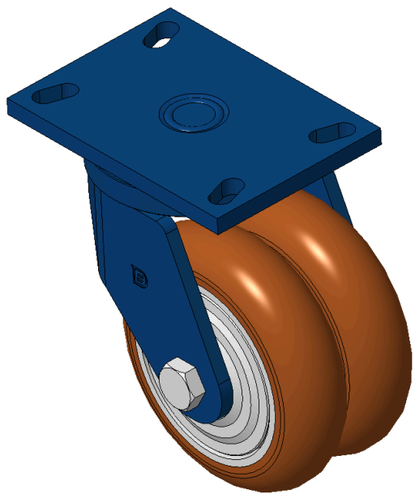

Picture may differ from original product

Drawings are for reference only and may differ from the product

Technical Data

◉ Metric ○ Imperial

Wheel Diameter	150mm
Wheel Width	42mm
Wheel Bearing	Wheels With Ball Bearings
Plate Size	159 x 114mm
Bolt Hole Spacing	129 x 74mm
Plate Hole	25.5 x 13mm
Offset	48mm
Swivel Interference	260mm
Overall Height	191mm
Swivel Radius	130mm
Hardness Of Tread	92±5° Shore A
Load Capacity (Dynamic)	550kgs
Load Capacity (Static)	825kgs
Temperature	-20°C to +70°C
Fork Type	Swivel Caster
Stainless	N/A
Electrical Conductivity	N/A
Anti-Static	N/A
Weight	6.46kgs
Standard	ISO22883

Advantages at a glance

Rolling Resistance	●●●●●
Operating Noise	●●●●●
Floor Surface Preservation	●●●●●

Dimensions

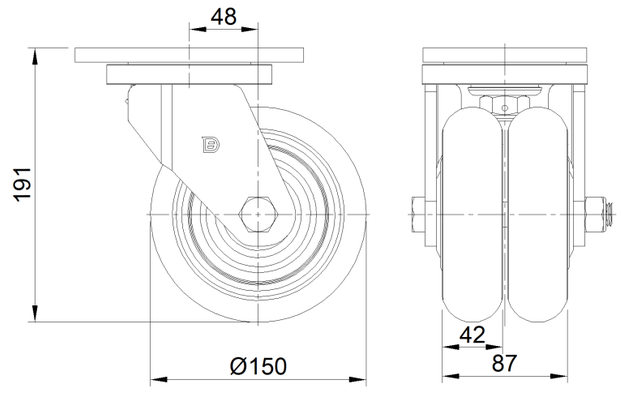

Mounting

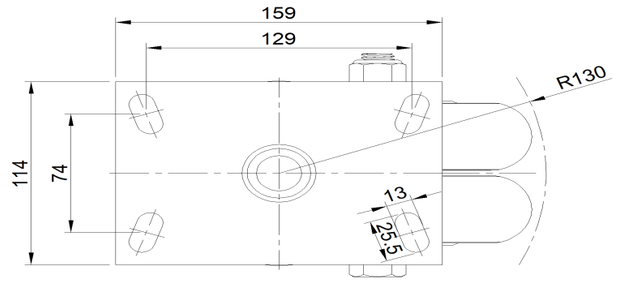

* For any deviation between metric and imperial spec, please refer to the metric spec.

© Copyright 2026 DershengInternational www.dersheng.com