1152 Anti-Friction Caster Series

HPU Wheel (Brown-Orange-Yellow) Wheel Diameter × Wheel Width 150 × 75mm

EAN

KS-11520600984141

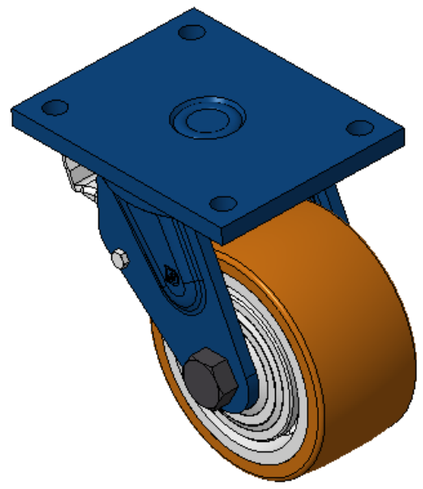

Picture may differ from original product

Drawings are for reference only and may differ from the product

Technical Data

◉ Metric ○ Imperial

Wheel Diameter	150mm
Wheel Width	75mm
Wheel Bearing	Wheels With Ball Bearings
Plate Size	175 x 140mm
Bolt Hole Spacing	140x105mm
Plate Hole	15mm
Offset	55mm
Swivel Interference	266mm
Overall Height	200mm
Swivel Radius	133mm
Hardness Of Tread	92±5° Shore A
Load Capacity (Dynamic)	1000kgs
Load Capacity (Static)	1500kgs
Temperature	-20°C to +70°C
Fork Type	Swivel Caster With Rear Brake
Stainless	N/A
Electrical Conductivity	N/A
Anti-Static	N/A
Weight	8.44kgs
Standard	ISO22883

Advantages at a glance

Rolling Resistance	●●●●●
Operating Noise	●●●●○
Floor Surface Preservation	●●●●●

Dimensions

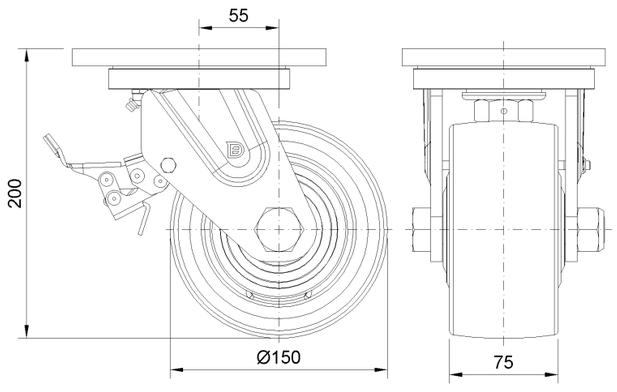

Mounting

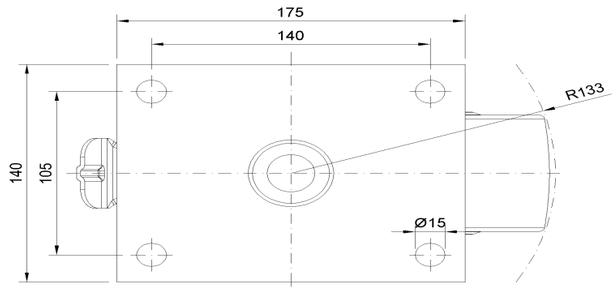

* For any deviation between metric and imperial spec, please refer to the metric spec.

© Copyright 2026 DershengInternational www.dersheng.com