1152 Anti-Friction Caster Series

HPU Wheel (Brown-Orange-Yellow) Wheel Diameter × Wheel Width 150 × 75mm

EAN

KS-11520600984141

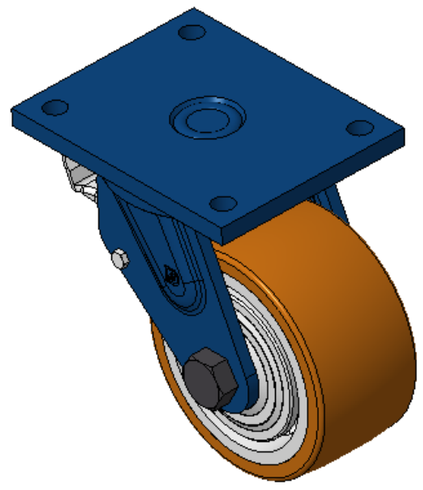

Picture may differ from original product

Drawings are for reference only and may differ from the product

Technical Data

◉ Imperial ○ Metric

Wheel Diameter	6 "
Wheel Width	3 "
Wheel Bearing	Wheels With Ball Bearings
Plate Size	7 " x 5-9/16 "
Bolt Hole Spacing	5-1/2 “x4-1/8”
Plate Hole	5/8 "
Offset	2-3/16 "
Swivel Interference	10-1/2 "
Overall Height	8 "
Swivel Radius	5-5/16 "
Hardness Of Tread	92±5° Shore A
Load Capacity (Dynamic)	2205lbs
Load Capacity (Static)	3307lbs
Temperature	-4°F to +158°F
Fork Type	Swivel Caster With Rear Brake
Stainless	N/A
Electrical Conductivity	N/A
Anti-Static	N/A
Weight	18.6lbs
Standard	ISO22883

Advantages at a glance

Rolling Resistance	●●●●●
Operating Noise	●●●●○
Floor Surface Preservation	●●●●●

Dimensions

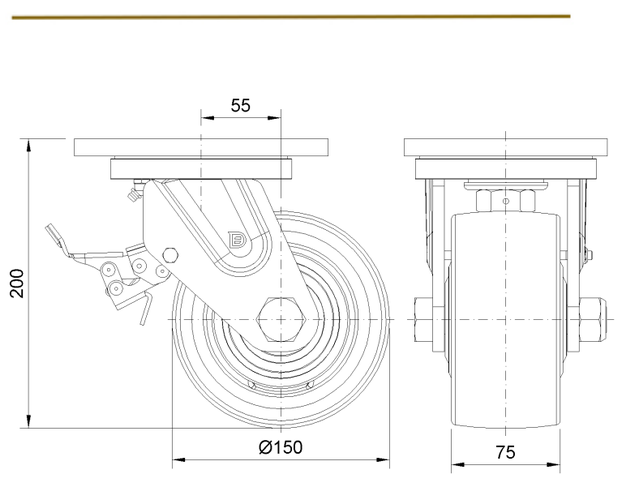

Mounting

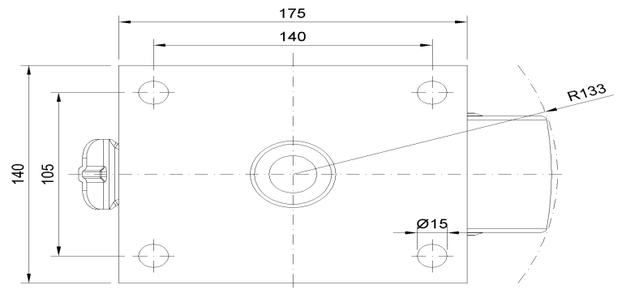

* For any deviation between metric and imperial spec, please refer to the metric spec.

© Copyright 2026 DershengInternational www.dersheng.com