Product Data Sheet

1152 Anti-Friction Caster Series

MC Nylon (beige) Wheel Diameter x Wheel Width 200 x 65mm

EAN

KS-11520800071021

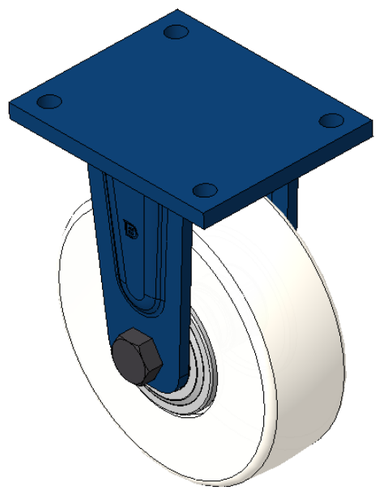

Picture may differ from original product

Rigid Caster, Welded Caster Fork, blue paint finish
Mounting Type - Top Plate, 140x105mm Bolt Hole Spacing
Reinforced Polypropylene, natural Wheel Tread
Bearing - Ball Bearing

Wheel surface: Thermoplastic plastic (PA6)
Wheel Center: Thermoplastic plastic (PA6)

Drawings are for reference only and may differ from the product

Technical Data

◉ Imperial ○ Metric

Wheel Diameter	8 "
Wheel Width	2-5/8
Wheel Bearing	Wheels With Ball Bearings
Plate Size	7 " x 5-9/16 "
Bolt Hole Spacing	5-1/2“x4-1/8”
Plate Hole	5/8 "
Overall Height	10-1/16 "
Hardness Of Tread	75±5° Shore D
Load Capacity (Dynamic)	2976lbs
Load Capacity (Static)	4464lbs
Temperature	-4°F to +176°F
Fork Type	Rigid Caster
Stainless	N/A
Electrical Conductivity	N/A
Anti-Static	N/A
Weight	15.3lbs
Standard	ISO22883

Advantages at a glance

Rolling Resistance	● ● ● ● ●
Operating Noise	● ● ○ ○ ○
Floor Surface Preservation	● ● ○ ○ ○

Dimensions

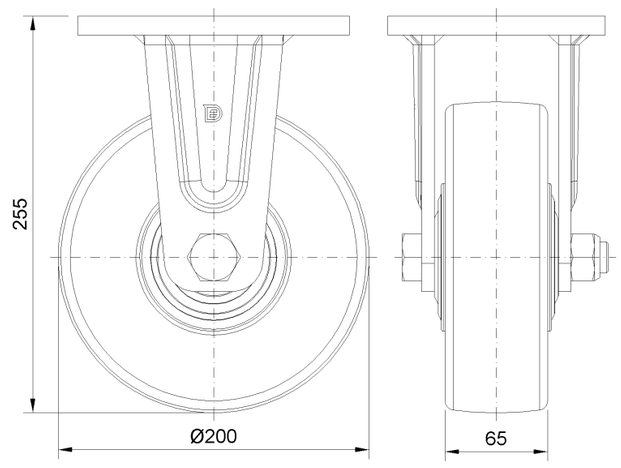

Mounting

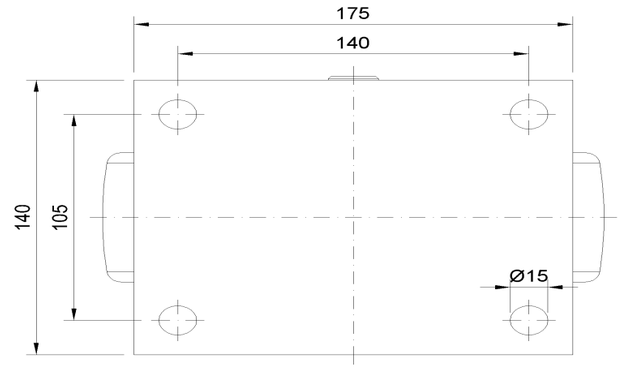

* For any deviation between metric and imperial spec, please refer to the metric spec.

© Copyright 2025 DershengInternational www.dersheng.com