1152 Self-Align Casters Series

MRC (Transparent) Wheel Diameter x Wheel Width 200 x 50mm

EAN

KS-11520800072741

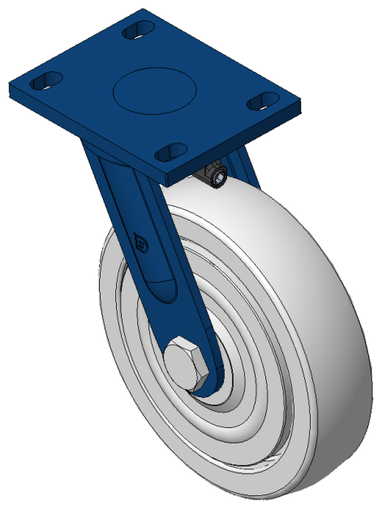

Picture may differ from original product

Swivel Caster with self-reset function, Welded Caster Fork Surface sprayed with blue paint, Mounting Type - Top Plate, Hole spacing 110x75 Reinforced Polypropylene, Wheel Tread Natural Color Bearing-Ball Bearing

Wheel tread: Thermoplastic (PA6)

Wheel Center: Thermoplastic (PA6)

Drawings are for reference only and may differ from the product

Technical Data

◉ Metric ○ Imperial

Wheel Diameter	200mm
Wheel Width	50mm
Wheel Bearing	Wheels With Ball Bearings
Plate Size	140 x 110mm
Bolt Hole Spacing	110x75mm
Plate Hole	22 x 13mm
Offset	62mm
Swivel Interference	328mm
Overall Height	248mm
Swivel Radius	164mm
Hardness Of Tread	75±5° Shore D
Load Capacity (Dynamic)	450kgs
Load Capacity (Static)	675kgs
Temperature	-20°C to +80°C
Fork Type	Swivel Caster
Stainless	N/A
Electrical Conductivity	N/A
Anti-Static	N/A
Weight	4.43kgs
Standard	ISO22883

Advantages at a glance

Rolling Resistance	● ● ● ● ●
Operating Noise	● ● ○ ○ ○
Floor Surface Preservation	● ● ○ ○ ○

Dimensions

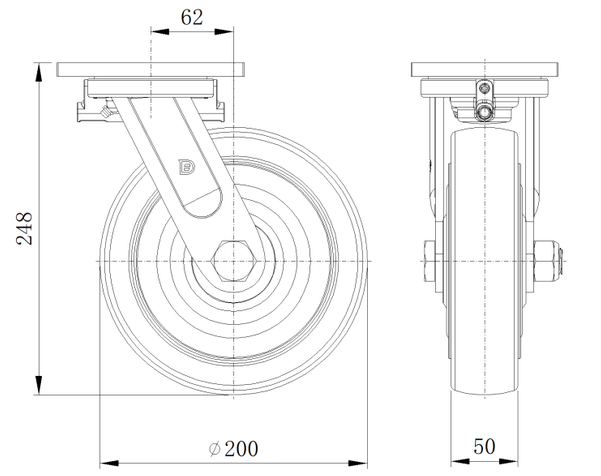

Mounting

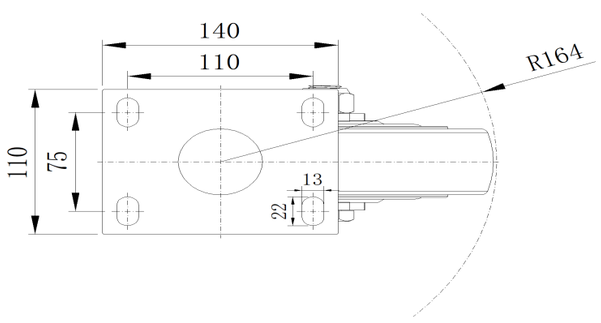

* For any deviation between metric and imperial spec, please refer to the metric spec.

© Copyright 2025 DershengInternational www.dersheng.com