1152 Anti-Friction Caster Series

VQPU (brown round) Wheel Diameter x Wheel Width 300 x 90mm

EAN

KS-11521200544041

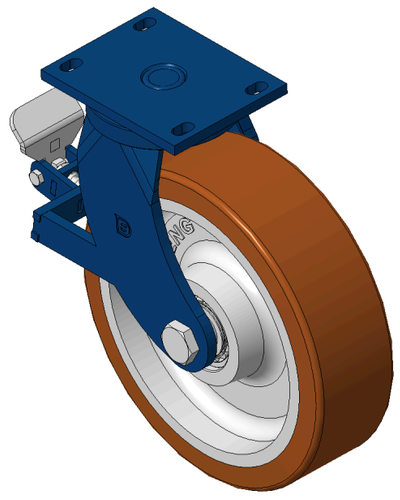

Drawings are for reference only and may differ from the product

Picture may differ from original product

Technical Data

◉ Metric ○ Imperial

Wheel Diameter	300mm
Wheel Width	90mm
Wheel Bearing	Wheels With Ball Bearings
Plate Size	167 x 130mm
Bolt Hole Spacing	140x85mm
Plate Hole	22 x 13mm
Offset	80mm
Swivel Interference	474mm
Overall Height	352mm
Swivel Radius	237mm
Hardness Of Tread	92±5° Shore A
Load Capacity (Dynamic)	2250kgs
Load Capacity (Static)	3375kgs
Temperature	-20°C to +70°C
Fork Type	Swivel Caster With Rear Brake
Stainless	N/A
Electrical Conductivity	N/A
Anti-Static	N/A
Weight	27.30kgs
Standard	ISO22883

Advantages at a glance

Rolling Resistance	●●●●●
Operating Noise	●●●●●
Floor Surface Preservation	●●●●●

Dimensions

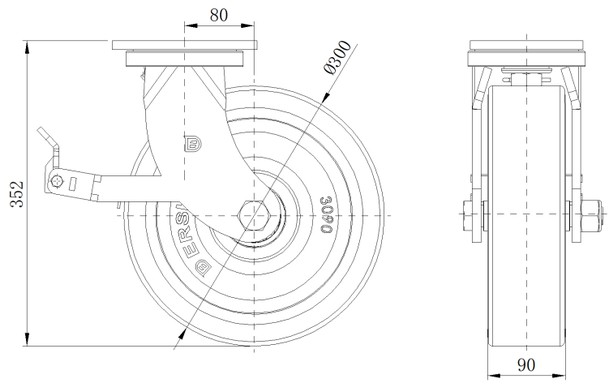

Mounting

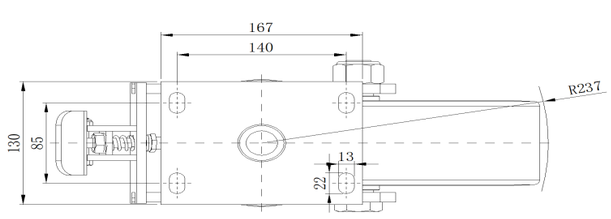

* For any deviation between metric and imperial spec, please refer to the metric spec.

© Copyright 2026 DershengInternational www.dersheng.com