1152 Anti-Friction Caster Series

VQPU (brown round) Wheel Diameter x Wheel Width 300 x 90mm

EAN

KS-11521200544041

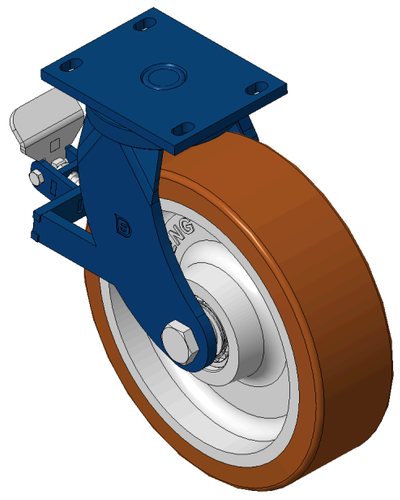

Drawings are for reference only and may differ from the product

Picture may differ from original product

Technical Data

◉ Imperial ○ Metric

Wheel Diameter	11-13/16 ”
Wheel Width	3-9/16 "
Wheel Bearing	Wheels With Ball Bearings
Plate Size	6-5/8 " x 5-3/16 "
Bolt Hole Spacing	5-1/2 " x3-3/8 "
Plate Hole	7/8 " x 9/16 "
Offset	3-3/16 "
Swivel Interference	18-3/4 "
Overall Height	14 "
Swivel Radius	9-1/2 "
Hardness Of Tread	92±5° Shore A
Load Capacity (Dynamic)	4960lbs
Load Capacity (Static)	7441lbs
Temperature	-4°F to +158°F
Fork Type	Swivel Caster With Rear Brake
Stainless	N/A
Electrical Conductivity	N/A
Anti-Static	N/A
Weight	60.2lbs
Standard	ISO22883

Advantages at a glance

Rolling Resistance	●●●●●
Operating Noise	●●●●●
Floor Surface Preservation	●●●●●

Dimensions

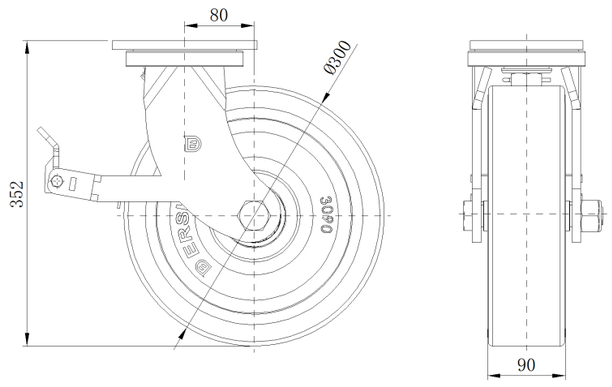

Mounting

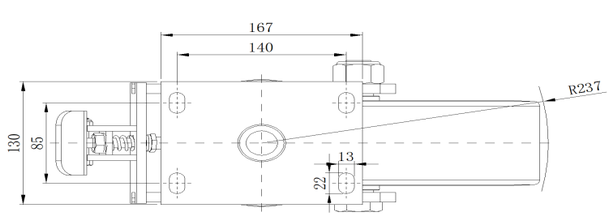

* For any deviation between metric and imperial spec, please refer to the metric spec.

© Copyright 2026 DershengInternational www.dersheng.com