1155 STAT Series Caster Series (All Plastic)

Resolute (blue gray) Wheel Diameter x Wheel Width 75 x 27mm

EAN

KS-11550300455013

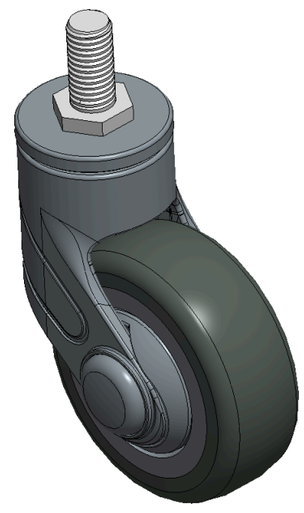

Picture may differ from original product

Drawings are for reference only and may differ from the product

Technical Data

◉ Imperial ○ Metric

Wheel Diameter	3 "
Wheel Width	1-1/16 "
Wheel Bearing	Wheels With Ball Bearings
Threaded Stem	M12
Threaded Length	1 "
Offset	1-1/16 "
Swivel Interference	5-3/16 "
Overall Height	4-1/4 "
Swivel Radius	2-9/16 "
Hardness Of Tread	72±5° Shore A
Load Capacity (Dynamic)	165lbs
Load Capacity (Static)	248lbs
Temperature	-4°F to +140°F
Fork Type	Swivel Caster
Stainless	N/A
Electrical Conductivity	N/A
Anti-Static	N/A
Weight	0.6lbs
Standard	ISO22881

Advantages at a glance

Rolling Resistance	●●●●●
Operating Noise	●●●●●
Floor Surface Preservation	●●●●●

Dimensions

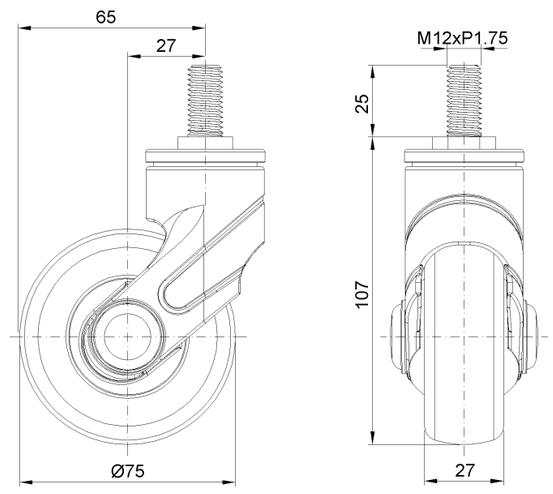

Mounting

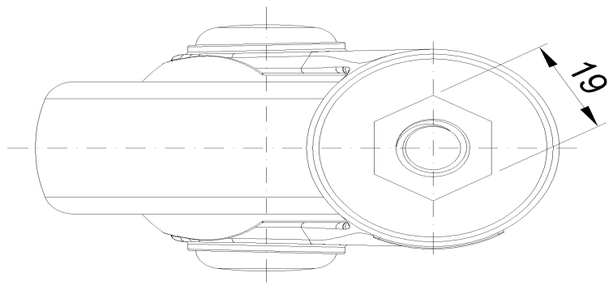

* For any deviation between metric and imperial spec, please refer to the metric spec.

© Copyright 2026 DershengInternational www.dersheng.com