1155-2 Light Plastic-2 Series

PPR Wheel Diameter × Wheel Width 75 x 25 mm

EAN

KS-11550303262233

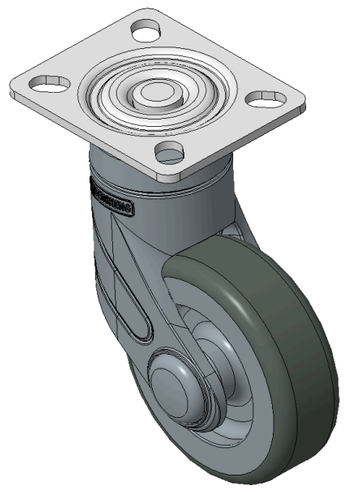

Picture may differ from original product

Drawings are for reference only and may differ from the product

Technical Data

◉ Imperial ○ Metric

Wheel Diameter	3 "
Wheel Width	1 "
Wheel Bearing	Wheel With Plain Bearing
Plate Size	2-7/8 " x 2-5/16 "
Bolt Hole Spacing	2-1/16 " ×1-9/16 "
Plate Hole	1/2 " x 5/16 "
Offset	1-1/16 "
Swivel Interference	5-1/25 "
Overall Height	4-13/16 "
Swivel Radius	2-5/8 "
Hardness Of Tread	82±5° Shore A
Load Capacity (Dynamic)	110lbs
Load Capacity (Static)	165lbs
Temperature	-4°F to +140°F
Fork Type	Swivel Caster
Stainless	N/A
Electrical Conductivity	N/A
Anti-Static	N/A
Weight	1.5lbs
Standard	ISO22881

Advantages at a glance

Rolling Resistance	●●●●○
Operating Noise	●●●●○
Floor Surface Preservation	●●●●●

Dimensions

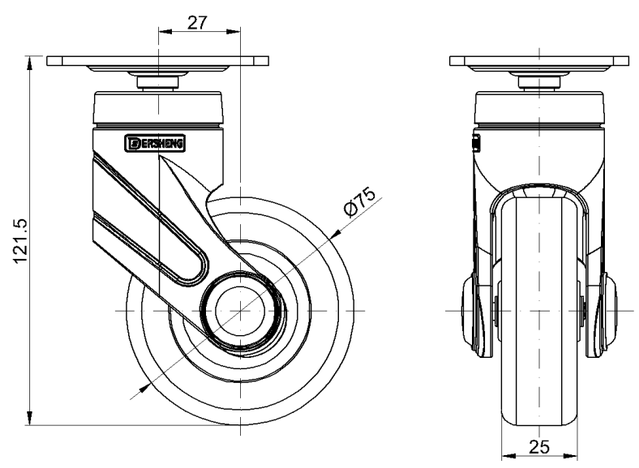

Mounting

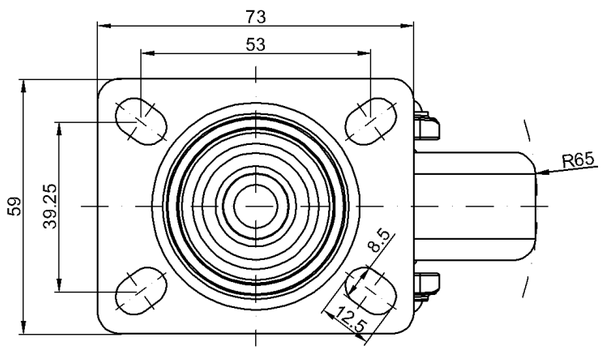

* For any deviation between metric and imperial spec, please refer to the metric spec.

© Copyright 2026 DershengInternational www.dersheng.com