# 1155-2 Light Plastic-2 Series

PPR Wheel Diameter × Wheel Width 75 x 24 mm

EAN

KS-11550303264013

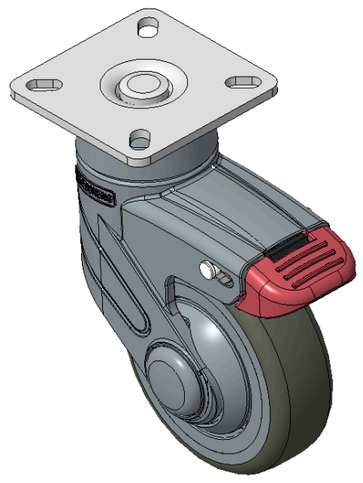

Picture may differ from original product

Drawings are for reference only and may differ from the product

## Technical Data

◉ Imperial ○ Metric

| | |
|---|---|
| Wheel Diameter | 3 " |
| Wheel Width | 1 " |
| Wheel Bearing | Wheels With Ball Bearings |
| Plate Size | 2-3/8 " x 2-3/8 " |
| Bolt Hole Spacing | 1-11/16 " ×1-11/16 " |
| Plate Hole | 7/16 " x 1/8 " |
| Offset | 1-1/4 " |
| Swivel Interference | 6-7/16 " |
| Overall Height | 4-3/4 " |
| Swivel Radius | 3-1/4 " |
| Hardness Of Tread | 82±5° Shore A |
| Load Capacity (Dynamic) | 110lbs |
| Load Capacity (Static) | 165lbs |
| Temperature | -4°F to +140°F |
| Fork Type | Swivel Caster |
| Stainless | N/A |
| Electrical Conductivity | N/A |
| Anti-Static | N/A |
| Weight | 0.7lbs |
| Standard | ISO22881 |

## Advantages at a glance

| | |
|---|---|
| Rolling Resistance | ●●●●○ |
| Operating Noise | ●●●●○ |
| Floor Surface Preservation | ●●●●● |

## Dimensions

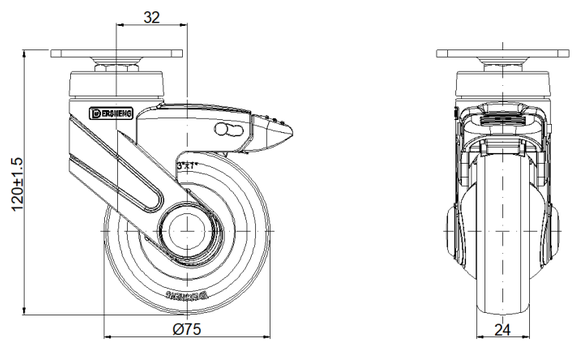


## Mounting

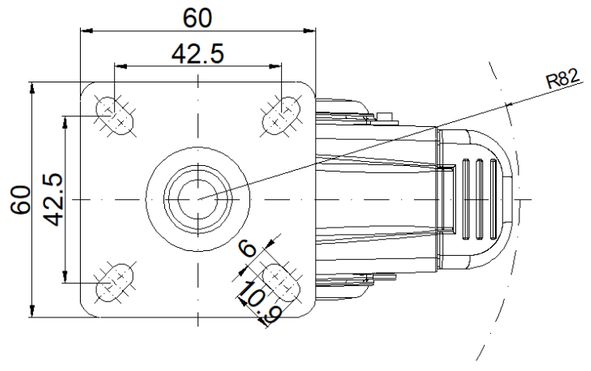


* For any deviation between metric and imperial spec, please refer to the metric spec.

© Copyright 2026 DershengInternational www.dersheng.com