1155-2 Light Plastic-2 Series

PPR Wheel Diameter × Wheel Width 75 x 24 mm

EAN

KS-11550303266063

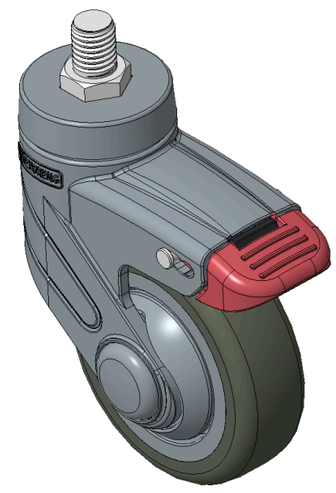

Picture may differ from original product

Drawings are for reference only and may differ from the product

Technical Data

◉ Imperial ○ Metric

Wheel Diameter	3 "
Wheel Width	1 "
Wheel Bearing	Wheels With Ball Bearings
Threaded Stem	M12×P1.75
Threaded Length	5/8 "
Offset	1-5/16 "
Swivel Interference	6-7/16 "
Overall Height	4-1/2 "
Swivel Radius	3-1/4 "
Hardness Of Tread	82±5° Shore A
Load Capacity (Dynamic)	110lbs
Load Capacity (Static)	165lbs
Temperature	-4°F to +140°F
Fork Type	Swivel Caster With Total Brake
Stainless	N/A
Electrical Conductivity	N/A
Anti-Static	N/A
Weight	0.6lbs
Standard	ISO22881

Advantages at a glance

Rolling Resistance	●●●●○
Operating Noise	●●●●○
Floor Surface Preservation	●●●●●

Dimensions

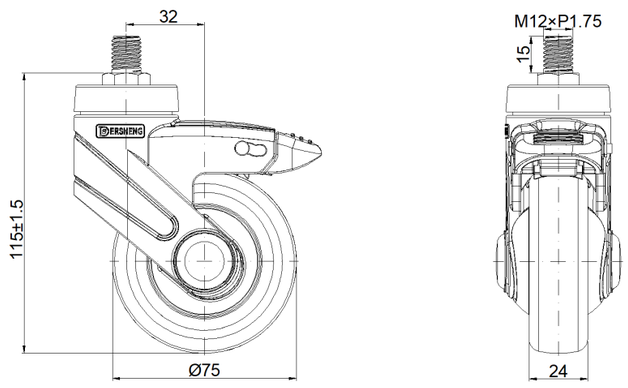

Mounting

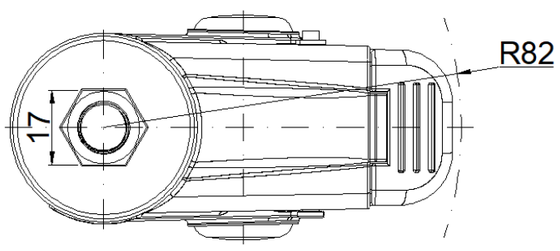

* For any deviation between metric and imperial spec, please refer to the metric spec.

© Copyright 2026 DershengInternational www.dersheng.com