Product Data Sheet

1155-1 Light Plastic-1 Series

PPR (Black) Wheel Diameter × Wheel Width 75 x 25mm

EAN

KS-11550391261013

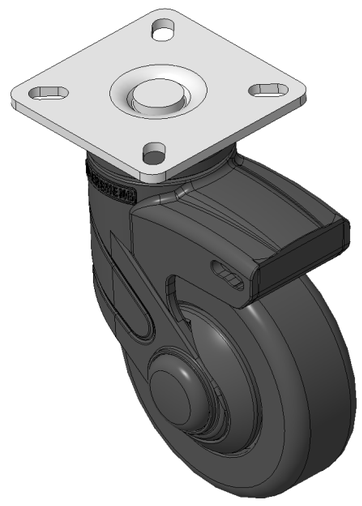

Picture may differ from original product

Rigid Casters, high-grade Top Plate—42.5x42.5 angled hole Top Plate Black legs made of polyamide reinforcement, Mounting Type - Top Plate Rust-proof, Corrosion resistant, Attractive appearance, Economical, and allows for Smooth rotation High-Quality Impact-Resistant Polypropylene Wheel Center, High-Quality Reinforced Polypropylene Rubber (TPR) Wheel Tread Black, wheels—Plain Bearing

Wheel tread: Thermoplastic rubber elastomer (TPR)

Wheel Center: Made of high-quality impact-resistant polypropylene

Drawings are for reference only and may differ from the product

Technical Data

◉ Imperial ○ Metric

Wheel Diameter	3 "
Wheel Width	1 "
Wheel Bearing	Wheel With Plain Bearing
Plate Size	2-7/16 " x 2-7/16 "
Bolt Hole Spacing	1-11/16“x1-11/16”
Plate Hole	3/8 " x 1/4 "
Overall Height	4-1/2 "
Hardness Of Tread	82±5° Shore A
Load Capacity (Dynamic)	165lbs
Load Capacity (Static)	248lbs
Temperature	-4°F to +140°F
Fork Type	Rigid Caster
Stainless	N/A
Electrical Conductivity	N/A
Anti-Static	N/A
Weight	0.7lbs
Standard	ISO22883

Advantages at a glance

Rolling Resistance	● ● ● ● ○
Operating Noise	● ● ● ● ○
Floor Surface Preservation	● ● ● ● ●

Dimensions

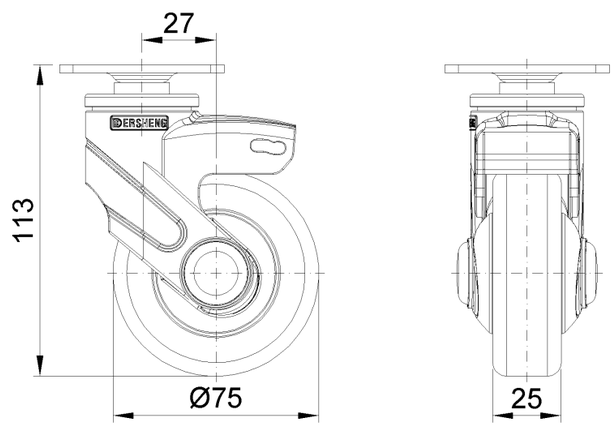

Mounting

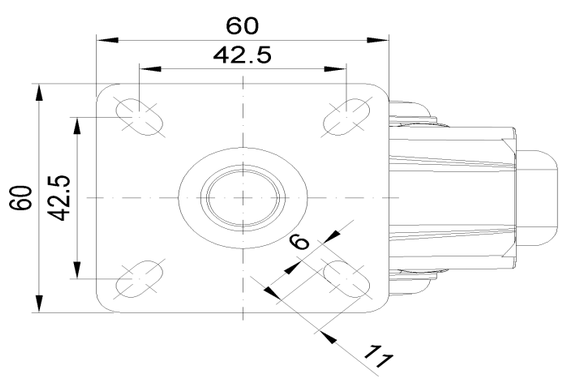

* For any deviation between metric and imperial spec, please refer to the metric spec.

© Copyright 2025 DershengInternational www.dersheng.com