1155 STAT Series Caster Series (All Plastic)

Classic PPR Wheel (Middle Tube Blue Gray/Dark Gray) Wheel Diameter×Wheel Width 100×31mm

EAN

KS-11550402266193

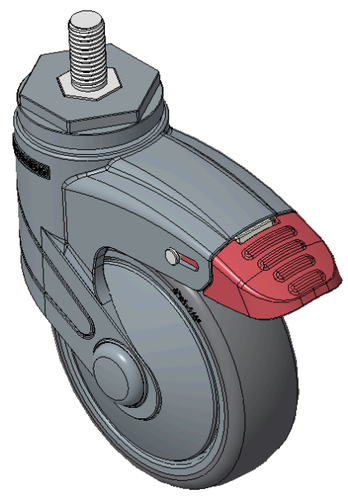

Drawings are for reference only and may differ from the product

Picture may differ from original product

Technical Data

◉ Imperial ○ Metric

Wheel Diameter	4 "
Wheel Width	1-1/4 "
Wheel Bearing	Wheels With Ball Bearings
Threaded Stem	M12
Threaded Length	1 "
Offset	1-7/16 "
Swivel Interference	9 "
Overall Height	5-1/2 "
Swivel Radius	4-1/2 "
Hardness Of Tread	82±5° Shore A
Load Capacity (Dynamic)	132lbs
Load Capacity (Static)	198lbs
Temperature	-4°F to +140°F
Fork Type	Swivel Caster With Total Brake
Stainless	N/A
Electrical Conductivity	N/A
Anti-Static	N/A
Weight	1.7lbs
Standard	ISO22881

Advantages at a glance

Rolling Resistance	●●●●○
Operating Noise	●●●●○
Floor Surface Preservation	●●●●●

Dimensions

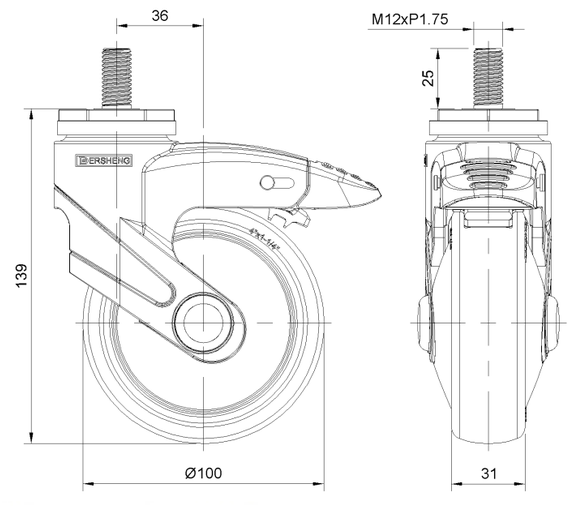

Mounting

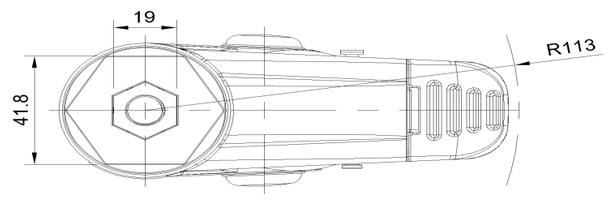

* For any deviation between metric and imperial spec, please refer to the metric spec.

© Copyright 2026 DershengInternational www.dersheng.com