1155 STAT Series Caster Series (All Plastic)

Classic PPR Wheel (Middle Tube Blue-Gray Dark Gray) Wheel Diameter × Wheel Width
100 x 24mm

EAN

KS-11550402267093

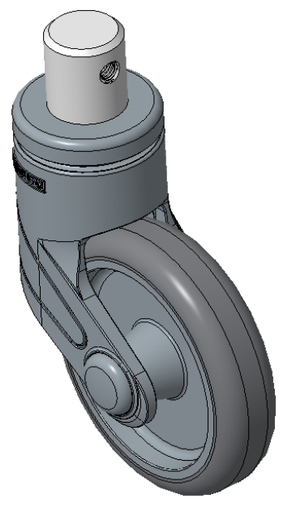

Picture may differ from original product

Drawings are for reference only and may differ from the product

Technical Data

◉ Metric ○ Imperial

Wheel Diameter	100mm
Wheel Width	24.5mm
Wheel Bearing	Wheel With Plain Bearing
Stem Diameter	28mm
Stem Length	30mm
Offset	36mm
Swivel Interference	172mm
Overall Height	138mm
Swivel Radius	86mm
Hardness Of Tread	85±5° Shore A
Load Capacity (Dynamic)	60kgs
Load Capacity (Static)	90kgs
Temperature	-20°C to +80°C
Fork Type	Swivel Caster
Stainless	N/A
Electrical Conductivity	N/A
Anti-Static	N/A
Weight	0.49kgs
Standard	ISO22881

Advantages at a glance

Rolling Resistance	●●●●●
Operating Noise	●●●●●
Floor Surface Preservation	●●●●●

Dimensions

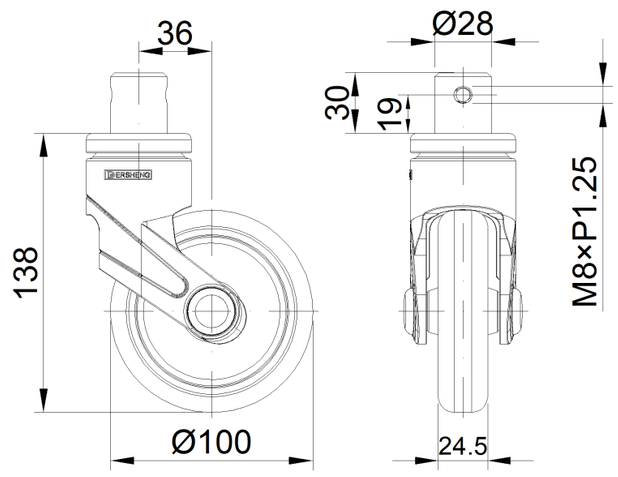

Mounting

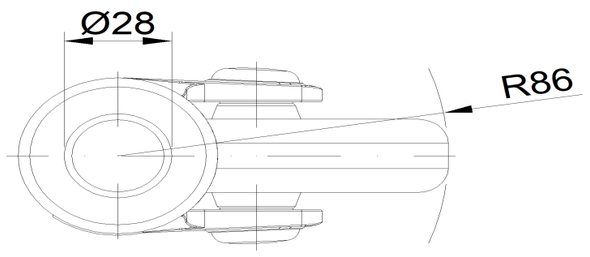

* For any deviation between metric and imperial spec, please refer to the metric spec.

© Copyright 2026 DershengInternational www.dersheng.com