1155-2 Light Plastic-2 Series

Classic PPR Wheel (Pearlescent Dark Gray) Wheel Diameter × Wheel Width 100 x 24mm

EAN

KS-11550403265113

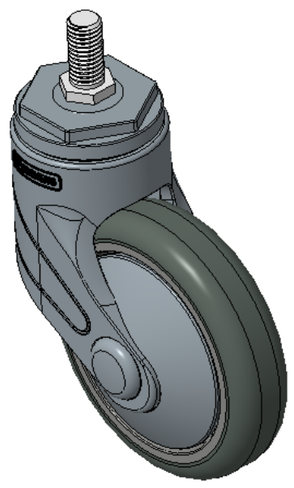

Picture may differ from original product

Drawings are for reference only and may differ from the product

Technical Data

◉ Metric ○ Imperial

Wheel Diameter	100mm
Wheel Width	24mm
Wheel Bearing	Wheel With Plain Bearing
Threaded Stem	M12
Threaded Length	25mm
Offset	36mm
Swivel Interference	174mm
Overall Height	139mm
Swivel Radius	87mm
Hardness Of Tread	82±5° Shore A
Load Capacity (Dynamic)	50kgs
Load Capacity (Static)	75kgs
Temperature	-20°C to +60°C
Fork Type	Swivel Caster
Stainless	N/A
Electrical Conductivity	N/A
Anti-Static	N/A
Weight	0.29kgs
Standard	ISO22881

Advantages at a glance

Rolling Resistance	●●●●○
Operating Noise	●●●●○
Floor Surface Preservation	●●●●●

Dimensions

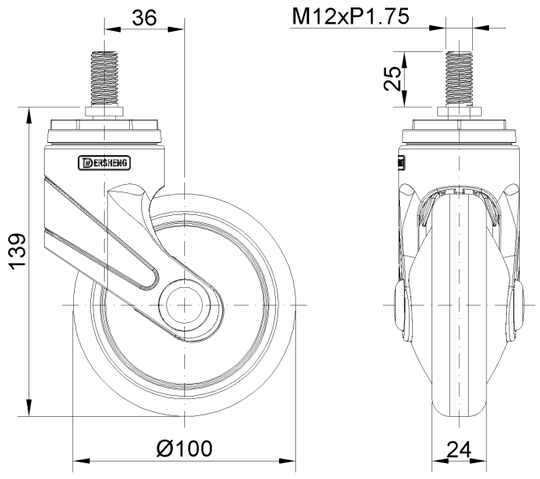

Mounting

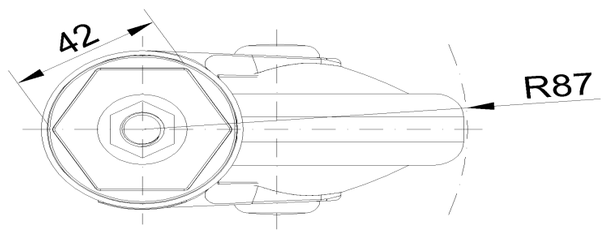

* For any deviation between metric and imperial spec, please refer to the metric spec.

© Copyright 2026 DershengInternational www.dersheng.com