Product Data Sheet

# 1155-1 Light Plastic-1 Series

PPR Wheel (Black Black - Plain Bearing Hub Lenth 37) Wheel Diameter x Wheel Width 100 x 24mm

EAN

KS-11550493264083

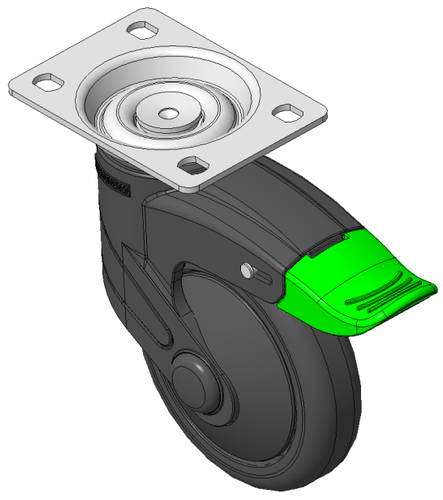

Picture may differ from original product

Casters with directional brake With locking system, 75x45 angled hole Top Plate
Black legs made of polyamide reinforced material, Mounting Type - Top Plate
Rust-proof, Corrosion resistant, Attractive appearance, Economical, and Smooth rotation
High-Quality Impact-Resistant Polypropylene Wheel Center, High-Quality Reinforced Polypropylene Rubber (TPR) Wheel Tread
Black, Bearing—Ball Bearings

Wheel tread: Thermoplastic rubber elastomer (TPR)

Wheel Center: Made of high-quality impact-resistant polypropylene

Drawings are for reference only and may differ from the product

## Technical Data

◉ Imperial ○ Metric

| | |
|---|---|
| Wheel Diameter | 4 " |
| Wheel Width | 1 " |
| Wheel Bearing | Wheels With Ball Bearings |
| Plate Size | 3-7/8 " x 2-3/4 " |
| Bolt Hole Spacing | 3 " x 1-13/16 " |
| Plate Hole | 3/8 " x 3/8 " |
| Offset | 1-7/16 " |
| Swivel Interference | 10 " |
| Overall Height | 5-5/8 " |
| Swivel Radius | 5 " |
| Hardness Of Tread | 82±5° Shore A |
| Load Capacity (Dynamic) | 198lbs |
| Load Capacity (Static) | 298lbs |
| Temperature | -4°F to +140°F |
| Fork Type | Swivel Caster With Directional Lock |
| Stainless | N/A |
| Electrical Conductivity | N/A |
| Anti-Static | N/A |
| Weight | 1.4lbs |
| Standard | ISO22883 |

## Advantages at a glance

| | |
|---|---|
| Rolling Resistance | ● ● ● ● ○ |
| Operating Noise | ● ● ● ● ○ |
| Floor Surface Preservation | ● ● ● ● ● |

## Dimensions

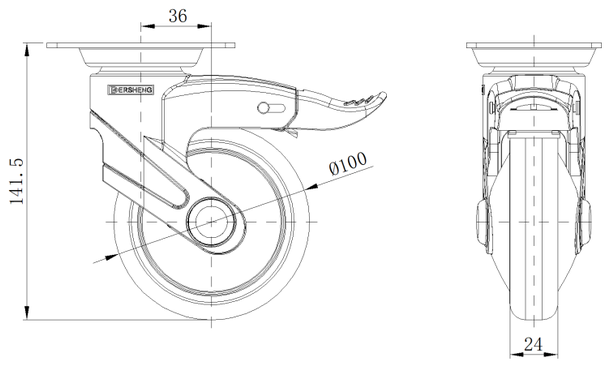


## Mounting

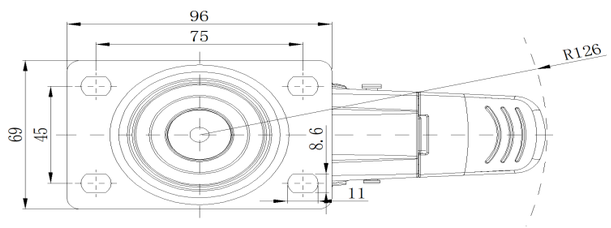


* For any deviation between metric and imperial spec, please refer to the metric spec.

© Copyright 2025 DershengInternational www.dersheng.com