Product Data Sheet

1155 STAT Series Caster Series (All Plastic)

Resolute (Middle Tube Blue-Gray Dark Gray) Wheel Diameter×Wheel Width
125×31mm

EAN

KS-11550500458283

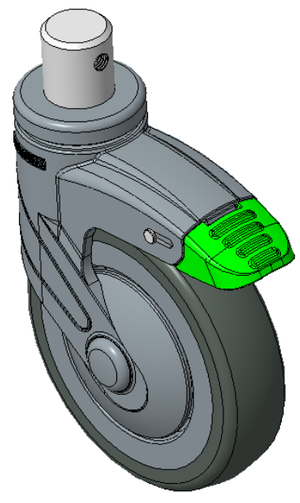

Picture may differ from original product

Long-directional braking, With locking system Casters, pin rivet—Ø28x30L
Blue-gray legs made of polyamide reinforcement, pin-mounted installation
Rust-proof, Corrosion resistant, Attractive appearance, Economical, and Smooth rotation
High-Quality Impact-Resistant Polypropylene Wheel Center, High-Quality Reinforced Polypropylene Rubber (TPR) Wheel Tread
Dark gray, wheels—Plain Bearing

Wheel tread: Thermoplastic rubber elastomer (TPR)

Wheel Center: Made of high-quality impact-resistant polypropylene

Drawings are for reference only and may differ from the product

Technical Data

◉ Imperial ○ Metric

Wheel Diameter	5 "
Wheel Width	1-1/4 "
Wheel Bearing	Wheel With Plain Bearing
Stem Diameter	1-1/8 "
Stem Length	1-3/16 "
Offset	1-1/2 "
Swivel Interference	9 "
Overall Height	6-1/2 "
Swivel Radius	4-1/2 "
Hardness Of Tread	72±5° Shore A
Load Capacity (Dynamic)	220lbs
Load Capacity (Static)	331lbs
Temperature	-4°F to +140°F
Fork Type	Swivel Caster With Directional Lock
Stainless	N/A
Electrical Conductivity	N/A
Anti-Static	N/A
Weight	2.1lbs
Standard	ISO22883

Advantages at a glance

Rolling Resistance	● ● ● ● ●
Operating Noise	● ● ● ● ●
Floor Surface Preservation	● ● ● ● ●

Dimensions

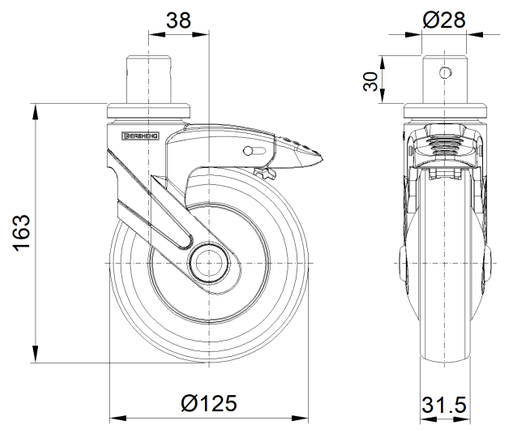

Mounting

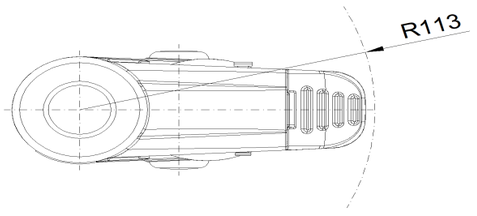

* For any deviation between metric and imperial spec, please refer to the metric spec.

© Copyright 2026 DershengInternational www.dersheng.com