1155 STAT Series Caster Series (All Plastic)

DERSHENG
Dersheng Casters Keep Rolling

Classic PPR Wheel (Pearlescent Dark Gray) Wheel Diameter×Wheel Width 125×24.5mm

EAN

KS-11550502264103

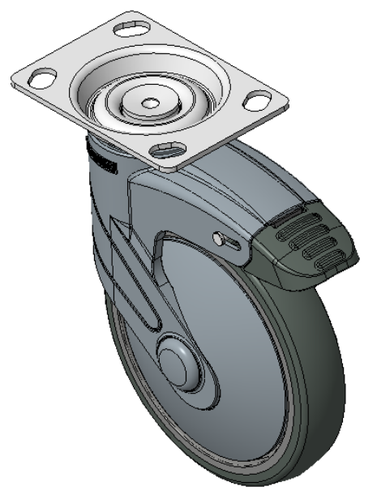

Drawings are for reference only and may differ from the product

Picture may differ from original product

Technical Data

◉ Imperial ○ Metric

Wheel Diameter	5 "
Wheel Width	1 "
Wheel Bearing	Wheels With Ball Bearings
Plate Size	3-7/8 " x 2-3/4 "
Bolt Hole Spacing	3 " x 2 "
Plate Hole	3/8 " x 5/8 "
Offset	1-1/2 "
Swivel Interference	9 "
Overall Height	6-9/16 "
Swivel Radius	4-1/2 "
Hardness Of Tread	82±5° Shore A
Load Capacity (Dynamic)	176lbs
Load Capacity (Static)	265lbs
Temperature	-4°F to +140°F
Fork Type	Swivel Caster With Total Brake
Stainless	N/A
Electrical Conductivity	N/A
Anti-Static	N/A
Weight	1.9lbs
Standard	ISO22881

Advantages at a glance

Rolling Resistance	● ● ● ● ○
Operating Noise	● ● ● ● ○
Floor Surface Preservation	● ● ● ● ●

Dimensions

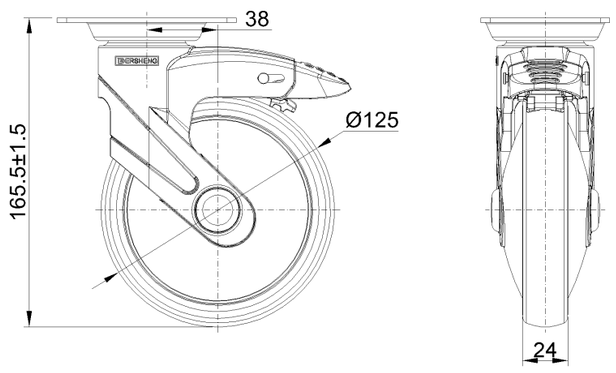

Mounting

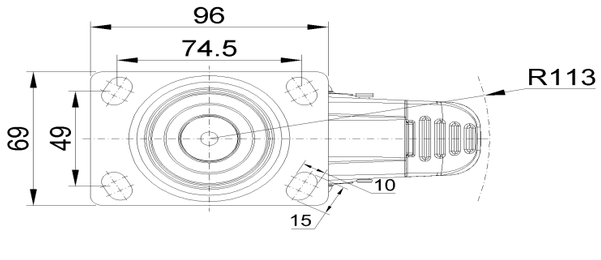

* For any deviation between metric and imperial spec, please refer to the metric spec.

© Copyright 2026 DershengInternational www.dersheng.com