Product Data Sheet

1155 STAT Series Caster Series (All Plastic)

Classic PPR Wheel (Middle Tube Blue Gray/Dark Gray) Wheel Diameter×Wheel Width 125×24.5mm

EAN

KS-11550502268103

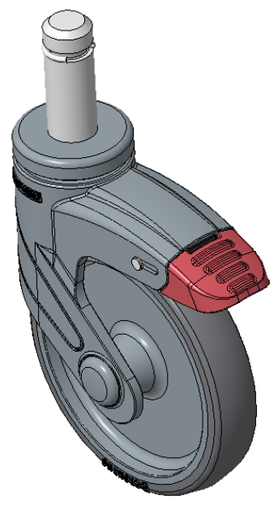

Picture may differ from original product

Long double-brake type, With locking system Casters, pin rivet—Ø21.6x56L
Blue-gray legs made of polyamide reinforcement, pin-mounted installation
Rust-proof, Corrosion resistant, Attractive appearance, Economical, and Smooth rotation
High-Quality Impact-Resistant Polypropylene Wheel Center, High-Quality Reinforced Polypropylene Rubber (TPR) Wheel Tread
Dark gray, Bearing—Ball Bearings

Wheel tread: Thermoplastic rubber elastomer (TPR)

Wheel Center: Made of high-quality impact-resistant polypropylene

Drawings are for reference only and may differ from the product

Technical Data

◉ Metric ○ Imperial

Wheel Diameter	125mm
Wheel Width	24.5mm
Wheel Bearing	Wheel With Plain Bearing
Stem Diameter	21.6mm
Stem Length	56mm
Offset	38mm
Swivel Interference	226mm
Overall Height	163mm
Swivel Radius	113mm
Hardness Of Tread	82±5° Shore A
Load Capacity (Dynamic)	70kgs
Load Capacity (Static)	105kgs
Temperature	-20°C to +60°C
Fork Type	Swivel Caster With Total Brake
Stainless	N/A
Electrical Conductivity	N/A
Anti-Static	N/A
Weight	0.83kgs
Standard	ISO22883

Advantages at a glance

Rolling Resistance	● ● ● ● ○
Operating Noise	● ● ● ● ○
Floor Surface Preservation	● ● ● ● ●

Dimensions

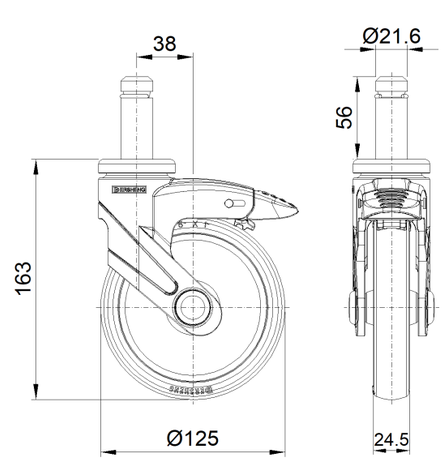

Mounting

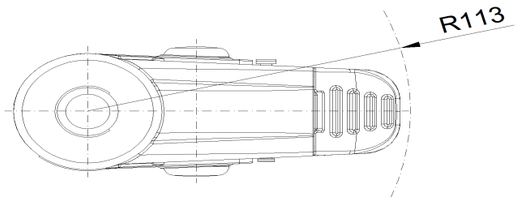

* For any deviation between metric and imperial spec, please refer to the metric spec.

© Copyright 2026 DershengInternational www.dersheng.com