Product Data Sheet

1155-1 Light Plastic-1 Series

PPR (black and black) Wheel Diameter x Wheel Width 125 x 31mm

EAN

KS-11550591264063

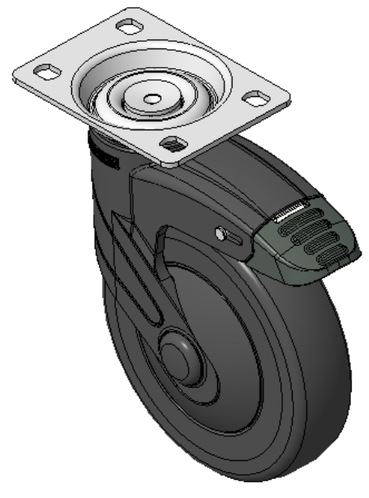

Picture may differ from original product

Total Brake With locking system Casters, 75x45 angled hole Top Plate
Black legs made of polyamide reinforced material, Mounting Type - Top Plate
Rust-proof, Corrosion resistant, Attractive appearance, Economical, and Smooth rotation
High-Quality Impact-Resistant Polypropylene Wheel Center, High-Quality Reinforced Polypropylene Rubber (TPR) Wheel Tread
Black, Bearing—Ball Bearings

Wheel tread: Thermoplastic rubber elastomer (TPR)

Wheel Center: Made of high-quality impact-resistant polypropylene

Drawings are for reference only and may differ from the product

Technical Data

◉ Metric ○ Imperial

Wheel Diameter	125mm
Wheel Width	31mm
Wheel Bearing	Wheels With Ball Bearings
Plate Size	96 x 69mm
Bolt Hole Spacing	75 x 45mm
Plate Hole	11 x 8.6mm
Offset	38mm
Swivel Interference	226mm
Overall Height	165.5mm
Swivel Radius	113mm
Hardness Of Tread	82±5° Shore A
Load Capacity (Dynamic)	90kgs
Load Capacity (Static)	135kgs
Temperature	-20°C to +60°C
Fork Type	Swivel Caster With Total Brake
Stainless	N/A
Electrical Conductivity	N/A
Anti-Static	N/A
Weight	0.89kgs
Standard	ISO22883

Advantages at a glance

Rolling Resistance	● ● ● ● ○
Operating Noise	● ● ● ● ○
Floor Surface Preservation	● ● ● ● ●

Dimensions

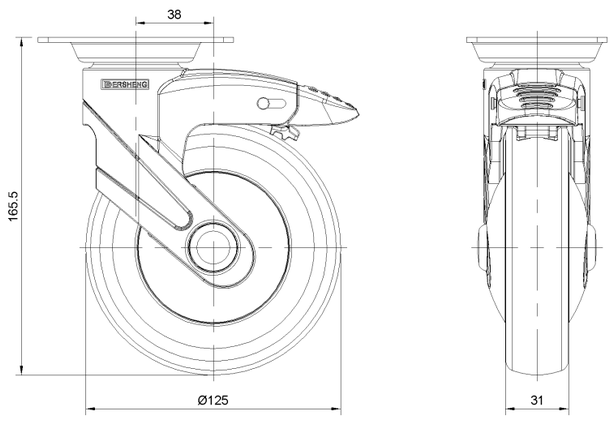

Mounting

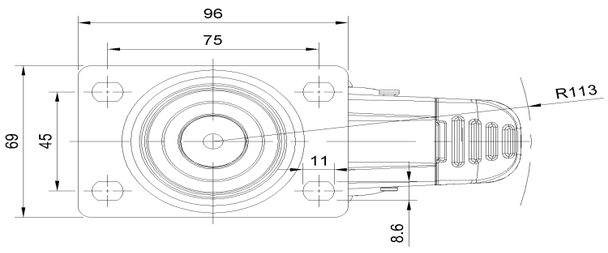

* For any deviation between metric and imperial spec, please refer to the metric spec.

© Copyright 2025 DershengInternational www.dersheng.com