Product Data Sheet

# 1155-1 Light Plastic-1 Series

PPR (black and black) Wheel Diameter x Wheel Width 125 x 24.5mm

EAN

KS-11550593268053

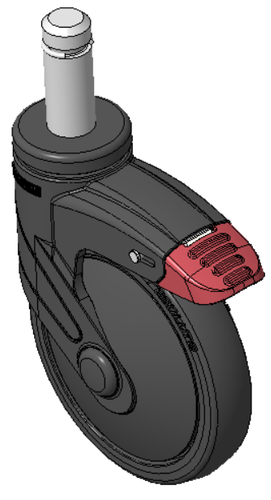

Picture may differ from original product

Total Brake With locking system Caster, Ø21.6x56L, with C-ring
Black Fork made of polyamide reinforced material, plug-in Mounting Type
Rust-proof, Corrosion resistant, Attractive appearance, Economical, and rotates smoothly
High-Quality Impact-Resistant Polypropylene Wheel Center, High-Quality Reinforced Polypropylene Rubber (TPR) Wheel Tread
Black, Bearing—Ball Bearings

Wheel tread: Thermoplastic rubber elastomer (TPR)

Wheel Center: Made of high-quality impact-resistant polypropylene

Drawings are for reference only and may differ from the product

## Technical Data

◉ Metric ○ Imperial

| | |
|---|---|
| Wheel Diameter | 125mm |
| Wheel Width | 24.5mm |
| Wheel Bearing | Wheels With Ball Bearings |
| Stem Diameter | 21.6mm |
| Stem Length | 56mm |
| Offset | 38mm |
| Swivel Interference | 226mm |
| Overall Height | 163mm |
| Swivel Radius | 113mm |
| Hardness Of Tread | 82±5° Shore A |
| Load Capacity (Dynamic) | 90kgs |
| Load Capacity (Static) | 135kgs |
| Temperature | -20°C to +60°C |
| Fork Type | Swivel Caster With Total Brake |
| Stainless | N/A |
| Electrical Conductivity | N/A |
| Anti-Static | N/A |
| Weight | 0.81kgs |
| Standard | ISO22883 |

## Advantages at a glance

| | |
|---|---|
| Rolling Resistance | ● ● ● ● ○ |
| Operating Noise | ● ● ● ● ○ |
| Floor Surface Preservation | ● ● ● ● ● |

## Dimensions

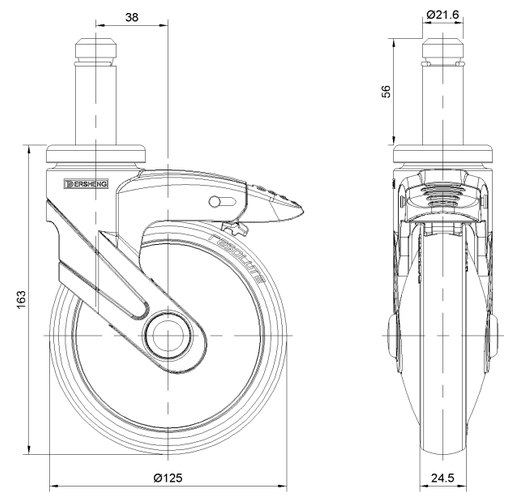


## Mounting

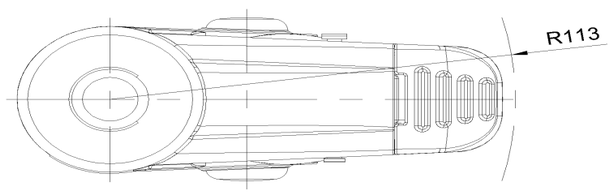


* For any deviation between metric and imperial spec, please refer to the metric spec.

© Copyright 2025 DershengInternational www.dersheng.com