Product Data Sheet

1156 56 Series Central Locking Caster Series

PPR Wheel (white dark gray) Wheel Diameter x Wheel Width 125 x 31mm

EAN

KS-11560500268133

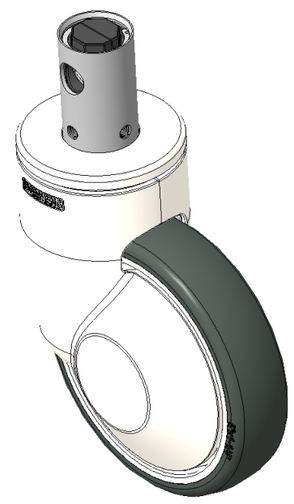

Picture may differ from original product

Short lever, Hexagonal hole cam control, center-locked Total Brake or movable Caster
Stamping Fabricated Caster Fork legs, white exterior Decorative Plastic Cover
Rust-proof, Corrosion resistant, Attractive appearance, and rotates smoothly
High-Quality Impact-Resistant Polypropylene Wheel Center, High-Quality Reinforced Polypropylene Rubber (TPR) Wheel Tread
Dark gray, Bearing—Ball Bearings

Wheel tread: Thermoplastic rubber elastomer (TPR)

Wheel Center: Made of high-quality impact-resistant polypropylene

Drawings are for reference only and may differ from the product

Technical Data

◉ Imperial ○ Metric

Wheel Diameter	5 "
Wheel Width	1-1/4 "
Wheel Bearing	Wheels With Ball Bearings
Stem Diameter	1-5/16 "
Stem Length	3-7/8 "
Offset	1-3/8 "
Swivel Interference	7-3/4 "
Overall Height	6-5/16 "
Swivel Radius	3-15/16 "
Hardness Of Tread	82±5° Shore A
Load Capacity (Dynamic)	265lbs
Load Capacity (Static)	413lbs
Temperature	-4°F to +140°F
Fork Type	Swivel Caster With Total Brake
Stainless	N/A
Electrical Conductivity	N/A
Anti-Static	N/A
Weight	2.3lbs
Standard	ISO22883

Advantages at a glance

Rolling Resistance	● ● ● ● ○
Operating Noise	● ● ● ● ○
Floor Surface Preservation	● ● ● ● ●

Dimensions

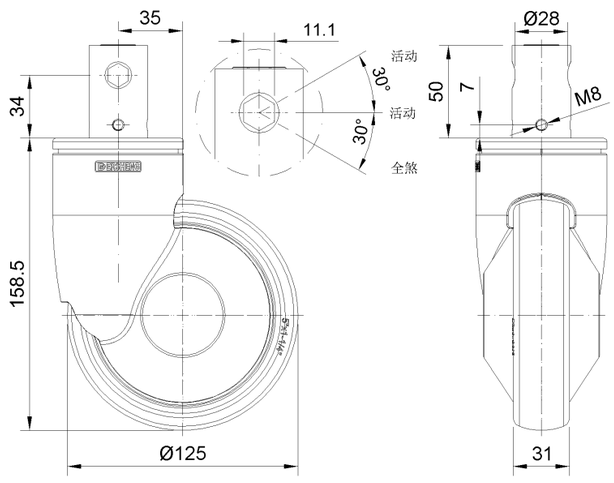

Mounting

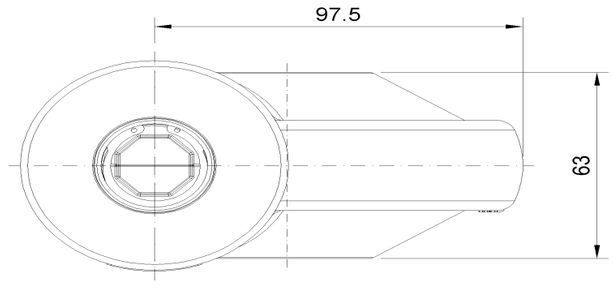

* For any deviation between metric and imperial spec, please refer to the metric spec.

© Copyright 2025 DershengInternational www.dersheng.com