Product Data Sheet

1157 57 Series Caster Series

PU (Red arc) Wheel Diameter × Wheel Width 100 x 34mm

EAN

KS-11570400331131

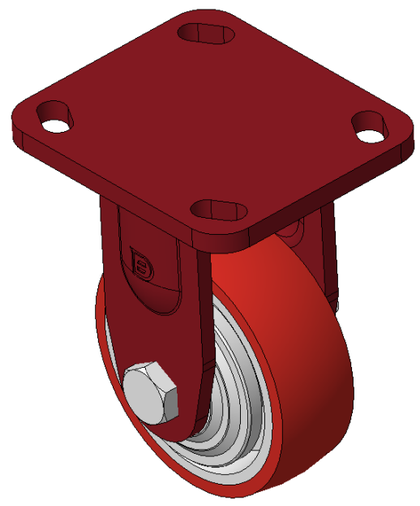

Picture may differ from original product

Rigid Caster, Welded Caster Fork
Red painted finish, Mounting Type - Top Plate, 85x70 Bolt Hole Spacing
Cast Iron core, High Quality Polyurethane Wheel Tread, Cast Iron red
Bearings—Ball Bearings

Wheel tread: Made of high-quality polyurethane

Wheel Center: iron core/cast iron core

Drawings are for reference only and may differ from the product

Technical Data

◉ Imperial ○ Metric

Wheel Diameter	4 "
Wheel Width	1-3/8 "
Wheel Bearing	Wheels With Ball Bearings
Plate Size	4-9/16 " x 4 "
Bolt Hole Spacing	3-3/8 " x 2-3/4 "
Plate Hole	13/16 " x 3/8 "
Overall Height	5-7/8 "
Hardness Of Tread	93±5° Shore A
Load Capacity (Dynamic)	551lbs
Load Capacity (Static)	827lbs
Temperature	-4°F to +158°F
Fork Type	Rigid Caster
Stainless	N/A
Electrical Conductivity	N/A
Anti-Static	N/A
Weight	4.3lbs
Standard	ISO22883

Advantages at a glance

Rolling Resistance	● ● ● ○ ○
Operating Noise	● ● ● ● ○
Floor Surface Preservation	● ● ● ● ○

Dimensions

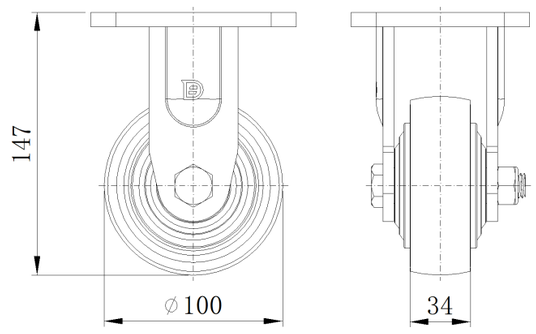

Mounting

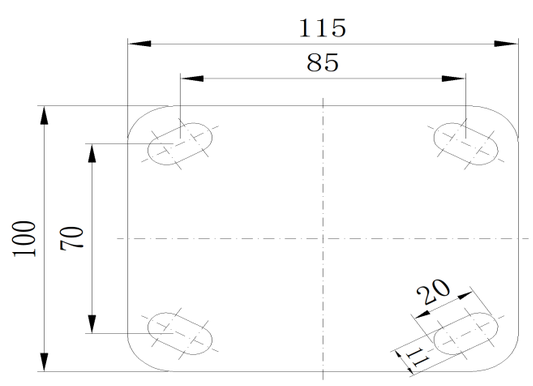

* For any deviation between metric and imperial spec, please refer to the metric spec.

© Copyright 2025 DershengInternational www.dersheng.com