Product Data Sheet

1157 57 Series Caster Series

PU (red flat) Wheel Diameter x Wheel Width 100 x 34mm

EAN

KS-11570400332021

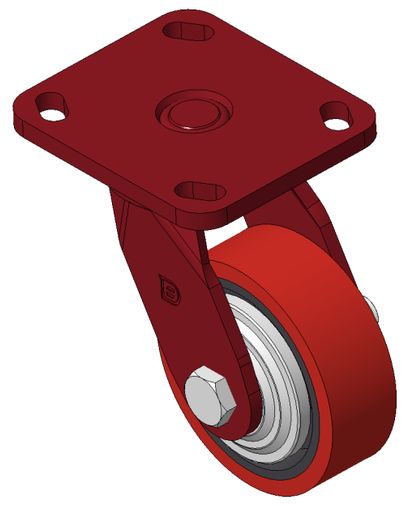

Picture may differ from original product

Swivel Caster with Welded Caster Fork
Red painted finish, Mounting Type - Top Plate, 85x70 Bolt Hole Spacing
Cast Iron core with High Quality Polyurethane Wheel Tread, Cast Iron red
Bearings—Ball Bearings

Wheel tread: Made of high-quality polyurethane

Wheel Center: iron core/cast iron core

Drawings are for reference only and may differ from the product

Technical Data

◉ Metric ○ Imperial

Wheel Diameter	100mm
Wheel Width	34mm
Wheel Bearing	Wheels With Ball Bearings
Plate Size	115 x 100mm
Bolt Hole Spacing	85 x 70mm
Plate Hole	20 x 11mm
Offset	40.5mm
Swivel Interference	186mm
Overall Height	147mm
Swivel Radius	93mm
Hardness Of Tread	93±5° Shore A
Load Capacity (Dynamic)	250kgs
Load Capacity (Static)	375kgs
Temperature	-20°C to +70°C
Fork Type	Swivel Caster
Stainless	N/A
Electrical Conductivity	N/A
Anti-Static	N/A
Weight	2.51kgs
Standard	ISO22883

Advantages at a glance

Rolling Resistance	● ● ● ○ ○
Operating Noise	● ● ● ● ○
Floor Surface Preservation	● ● ● ● ○

Dimensions

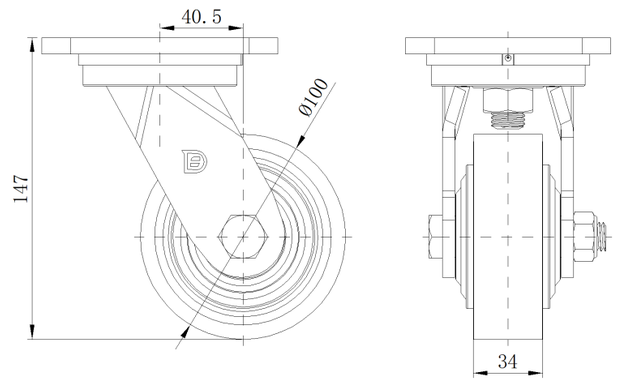

Mounting

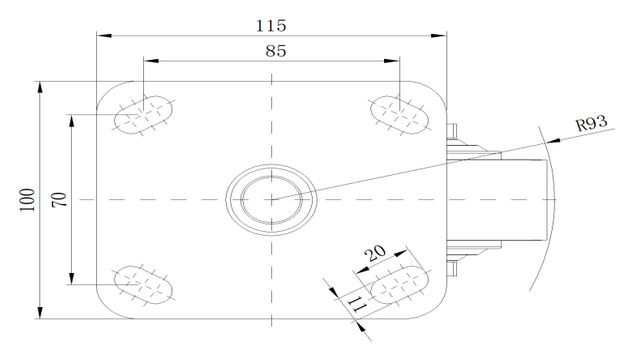

* For any deviation between metric and imperial spec, please refer to the metric spec.

© Copyright 2025 DershengInternational www.dersheng.com