Product Data Sheet

# 1157 57 Series Caster Series

QPU (brown flat) Wheel Diameter × Wheel Width 100 x 34mm

EAN

KS-11570400532061

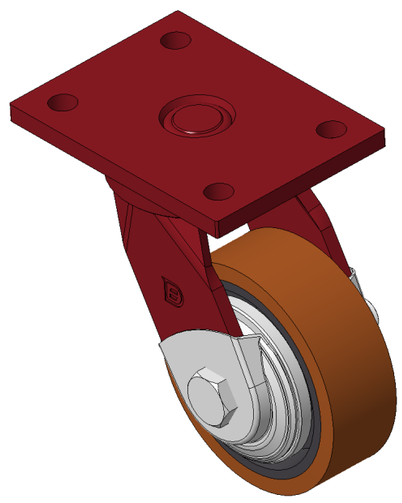

Picture may differ from original product

Swivel Caster with Welded Caster Fork
Red painted finish, Mounting Type - Top Plate, 90x60 Bolt Hole Spacing
Cast Iron core with High Quality Polyurethane Wheel Tread, Cast Iron brown
Bearings—Ball Bearings with special Anti-thread wheel cover

Wheel tread: Made of high-quality polyurethane

Wheel Center: iron core/cast iron core

Drawings are for reference only and may differ from the product

## Technical Data

◉ Imperial ○ Metric

| | |
|---|---|
| Wheel Diameter | 4 " |
| Wheel Width | 1-3/8 " |
| Wheel Bearing | Wheels With Ball Bearings |
| Plate Size | 4-13/16 " x 3-9/16 " |
| Bolt Hole Spacing | 3-9/16 " x 2-3/8 " |
| Plate Hole | 1/2 " |
| Offset | 1-5/8 " |
| Swivel Interference | 7-7/16 " |
| Overall Height | 5-7/8 " |
| Swivel Radius | 3-11/16 " |
| Hardness Of Tread | 92±5° Shore A |
| Load Capacity (Dynamic) | 849lbs |
| Load Capacity (Static) | 1273lbs |
| Temperature | -4°F to +158°F |
| Fork Type | Swivel Caster |
| Stainless | N/A |
| Electrical Conductivity | N/A |
| Anti-Static | N/A |
| Weight | 5.5lbs |
| Standard | ISO22883 |

## Advantages at a glance

| | |
|---|---|
| Rolling Resistance | ● ● ● ● ● |
| Operating Noise | ● ● ● ● ● |
| Floor Surface Preservation | ● ● ● ● ● |

## Dimensions

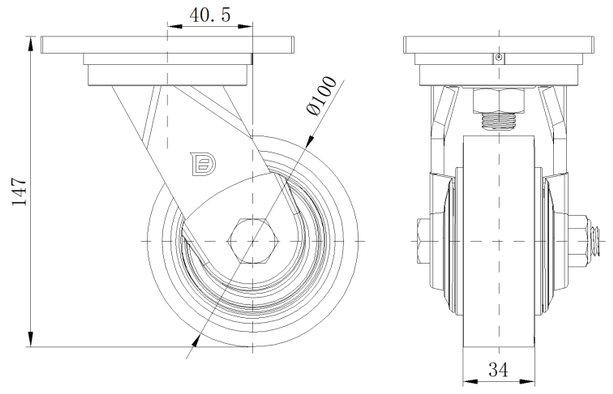


## Mounting

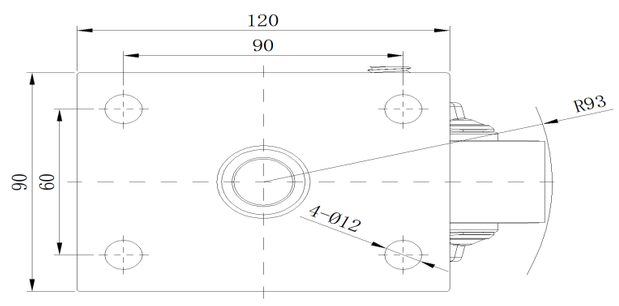


* For any deviation between metric and imperial spec, please refer to the metric spec.

© Copyright 2025 DershengInternational www.dersheng.com