Product Data Sheet

1157 57 Series Caster Series

QPU (brown round) Wheel Diameter × Wheel Width 100 x 34mm

EAN

KS-11570400532141

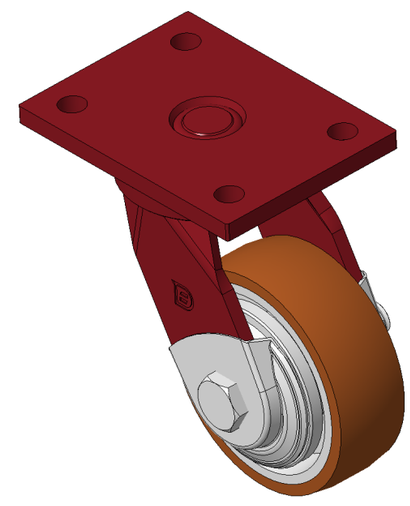

Picture may differ from original product

Swivel Caster with Welded Caster Fork
Red painted finish, Mounting Type - Top Plate, 90x60 Bolt Hole Spacing
Cast Iron core with High Quality Polyurethane Wheel Tread, Cast Iron brown
Bearings—Ball Bearings with special Anti-thread wheel cover

Wheel tread: Made of high-quality polyurethane

Wheel Center: iron core/cast iron core

Drawings are for reference only and may differ from the product

Technical Data

◉ Imperial ○ Metric

Wheel Diameter	4 "
Wheel Width	1-3/8 "
Wheel Bearing	Wheels With Ball Bearings
Plate Size	4-13/16 " x 3-9/16 "
Bolt Hole Spacing	3-9/16 " x 2-3/8 "
Plate Hole	1/2 "
Offset	1-5/8 "
Swivel Interference	7-7/16 "
Overall Height	5-7/8 "
Swivel Radius	3-11/16 "
Hardness Of Tread	92±5° Shore A
Load Capacity (Dynamic)	739lbs
Load Capacity (Static)	1107lbs
Temperature	-4°F to +158°F
Fork Type	Swivel Caster
Stainless	N/A
Electrical Conductivity	N/A
Anti-Static	N/A
Weight	5.4lbs
Standard	ISO22883

Advantages at a glance

Rolling Resistance	● ● ● ● ●
Operating Noise	● ● ● ● ●
Floor Surface Preservation	● ● ● ● ●

Dimensions

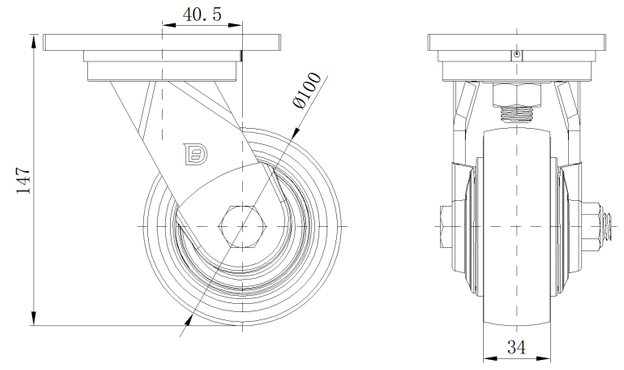

Mounting

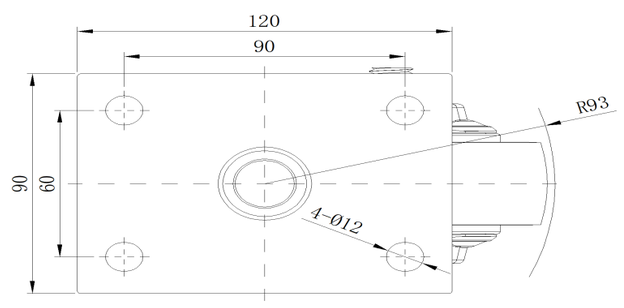

* For any deviation between metric and imperial spec, please refer to the metric spec.

© Copyright 2025 DershengInternational www.dersheng.com