Product Data Sheet

1157 57 Series Caster Series

ZQPU (brown round) Wheel Diameter x Wheel Width 100 x 22 (46.5) mm

EAN

KS-11570400801031

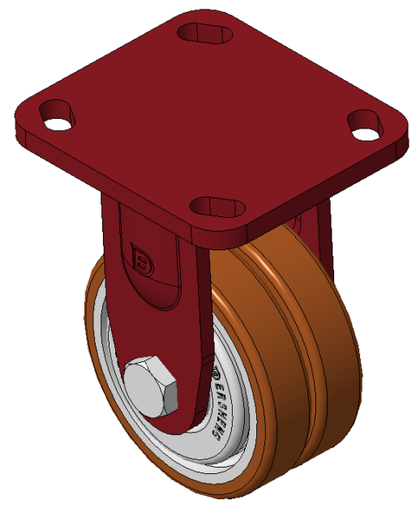

Picture may differ from original product

Rigid Caster with Welded Caster Fork Red painted finish, Mounting Type - Top Plate, 85x70 Bolt Hole Spacing Cast Iron Wheel Center with High Quality Polyurethane tread, Cast Iron brown Bearing—special Ball Bearing for reduced Rolling Resistance ZQPU Dual Wheels, Ergonomic design for easier starting and turning

Wheel tread: Made of high-quality polyurethane

Wheel Center: iron core/cast iron core

Drawings are for reference only and may differ from the product

Technical Data

◉ Metric ○ Imperial

Wheel Diameter	100mm
Wheel Width	46.5mm
Wheel Bearing	Wheels With Ball Bearings
Plate Size	115 x 100mm
Bolt Hole Spacing	85 x 70mm
Plate Hole	20 x 11mm
Overall Height	147mm
Hardness Of Tread	92±5° Shore A
Load Capacity (Dynamic)	335kgs
Load Capacity (Static)	502.5kgs
Temperature	-20°C to +70°C
Fork Type	Rigid Caster
Stainless	N/A
Electrical Conductivity	N/A
Anti-Static	N/A
Weight	2.70kgs
Standard	ISO22883

Advantages at a glance

Rolling Resistance	● ● ● ● ●
Operating Noise	● ● ● ● ●
Floor Surface Preservation	● ● ● ● ●

Dimensions

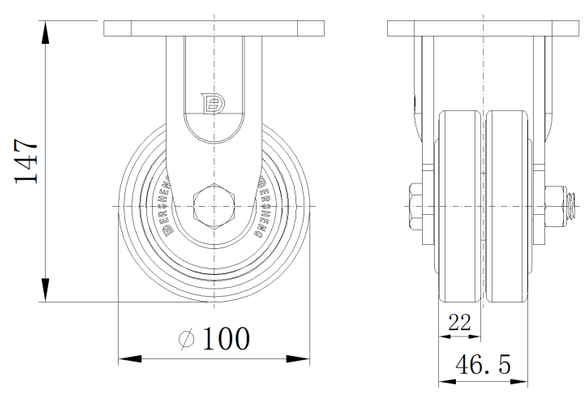

Mounting

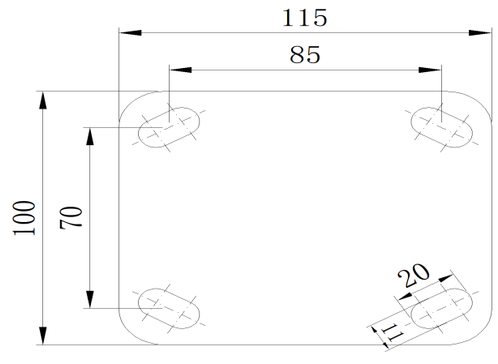

* For any deviation between metric and imperial spec, please refer to the metric spec.

© Copyright 2025 DershengInternational www.dersheng.com