1157 57 Series Caster Series

ZQPU (brown round) Wheel Diameter x Wheel Width 100 x 22 (46.5) mm

EAN

KS-11570400804071

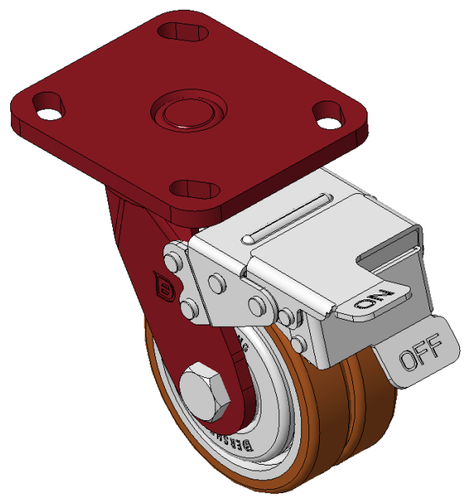

Picture may differ from original product

Front Brake locking system, Welded Caster Fork
Red painted finish, Mounting Type - Top Plate, 85x70 Bolt Hole Spacing
Cast Iron Wheel Center, High Quality Polyurethane Wheel Tread, Cast Iron brown
Bearings—special Ball Bearings for reduced Rolling Resistance
ZQPU dual wheels, Ergonomic design designally designed for easier starting and turning

Wheel tread: Made of high-quality polyurethane
Wheel Center: iron core/cast iron core

Drawings are for reference only and may differ from the product

Technical Data

◉ Metric ○ Imperial

Wheel Diameter	100mm
Wheel Width	46.5mm
Wheel Bearing	Wheels With Ball Bearings
Plate Size	115 x 100mm
Bolt Hole Spacing	85 x 70mm
Plate Hole	20 x 11mm
Offset	40.5mm
Swivel Interference	282mm
Overall Height	147mm
Swivel Radius	141mm
Hardness Of Tread	92±5° Shore A
Load Capacity (Dynamic)	200kgs
Load Capacity (Static)	300kgs
Temperature	-20°C to +70°C
Fork Type	Swivel Caster With Front Brake
Stainless	N/A
Electrical Conductivity	N/A
Anti-Static	N/A
Weight	3.39kgs
Standard	ISO22883

Advantages at a glance

Rolling Resistance	● ● ● ● ●
Operating Noise	● ● ● ● ●
Floor Surface Preservation	● ● ● ● ●

Dimensions

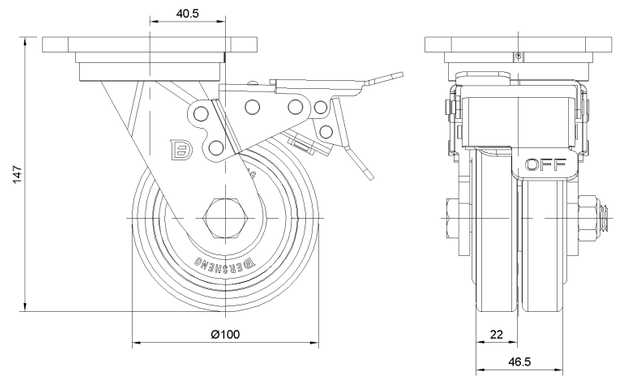

Mounting

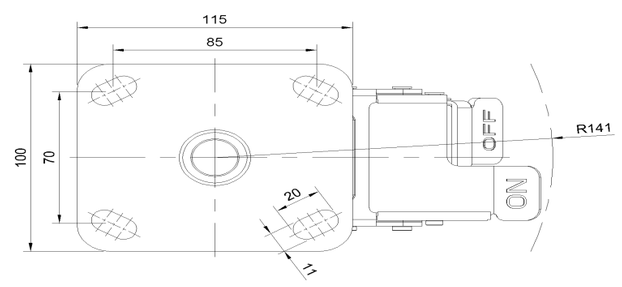

* For any deviation between metric and imperial spec, please refer to the metric spec.

© Copyright 2025 DershengInternational www.dersheng.com