Product Information Sheet

1157 57 Series Caster Series

ZQPU (brown round) Wheel Diameter x Wheel Width 125 x 24 (51) mm

EAN

KS-11570500804071

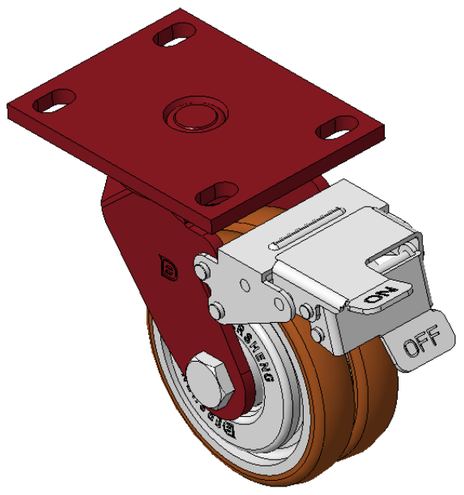

Picture may differ from original product

Equipped with front brake, With locking system Casters, Welded Caster Fork.
Red paint finish, Mounting Type - Top Plate, 110x75mm Bolt Hole Spacing.
Cast Iron Wheel Center, High Quality Polyurethane Wheel Tread, Cast Iron brown.
Bearings—specially designed Ball Bearings to reduce Rolling Resistance.
ZQPU dual wheels, Ergonomic design designally designed for easier starting and turning.

Wheel Tread: Hhigh-Quality Polyurethane

Wheel Center: Iron core / Cast iron core

Drawings are for reference only and may differ from the product

Technical Data

◉ Metric ○ Imperial

Wheel Diameter	125mm
Wheel Width	51mm
Wheel Bearing	Wheels With Ball Bearings
Plate Size	138 x 108mm
Bolt Hole Spacing	110x75mm
Plate Hole	22 x 13mm
Offset	45mm
Swivel Interference	316mm
Overall Height	170mm
Swivel Radius	158mm
Hardness Of Tread	92±5° Shore A
Load Capacity (Dynamic)	450kgs
Load Capacity (Static)	675kgs
Temperature	-20°C to +70°C
Fork Type	Swivel Caster With Front Brake
Stainless	N/A
Electrical Conductivity	N/A
Anti-Static	N/A
Weight	4.34kgs
Standard	ISO22883

Advantages at a glance

Rolling Resistance	● ● ● ● ●
Operating Noise	● ● ● ● ●
Floor Surface Preservation	● ● ● ● ●

Dimensions

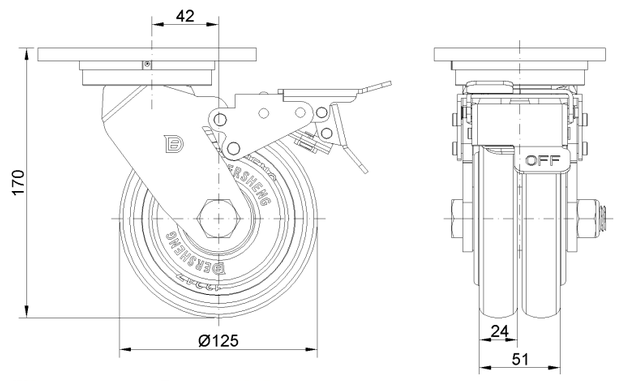

Mounting

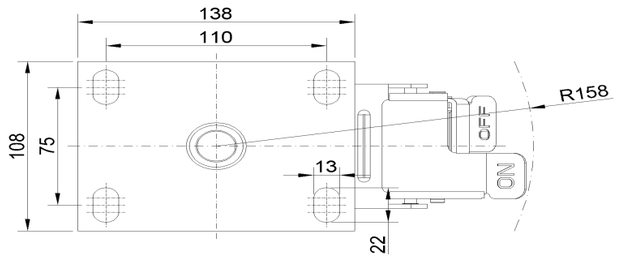

* For any deviation between metric and imperial spec, please refer to the metric spec.

© Copyright 2026 DershengInternational www.dersheng.com