Product Data Sheet

1157 57 Series Caster Series

Non-marking NBR Rubber (milling) Wheel Diameter x Wheel Width 150 x 40mm

EAN

KS-11570600042051

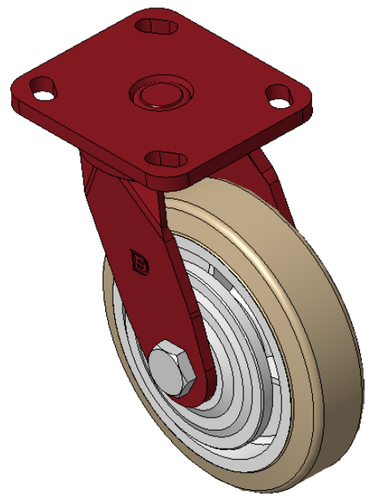

Picture may differ from original product

Swivel Caster with Welded Caster Fork, red painted finish.
Mounting Type - Top Plate, 85 x 70 Bolt Hole Spacing.
Cast Iron core, High-Quality, highly Resilient Rubber Wheel Tread, Cast Iron in natural finish.
Bearings—Ball Bearings.

Wheel surface: high quality and high elastic rubber wheel surface

Wheel Center: iron core/cast iron core

Drawings are for reference only and may differ from the product

Technical Data

◉ Metric ○ Imperial

Wheel Diameter	150mm
Wheel Width	40mm
Wheel Bearing	Wheels With Ball Bearings
Plate Size	115 x 100mm
Bolt Hole Spacing	85 x 70mm
Plate Hole	20 x 11mm
Offset	42mm
Swivel Interference	238mm
Overall Height	191mm
Swivel Radius	119mm
Hardness Of Tread	85±5° Shore A
Load Capacity (Dynamic)	300kgs
Load Capacity (Static)	450kgs
Temperature	-20°C to +80°C
Fork Type	Swivel Caster
Stainless	N/A
Electrical Conductivity	N/A
Anti-Static	N/A
Weight	3.54kgs
Standard	ISO22883

Advantages at a glance

Rolling Resistance	● ● ● ○ ○
Operating Noise	● ● ● ● ○
Floor Surface Preservation	● ● ● ● ○

Dimensions

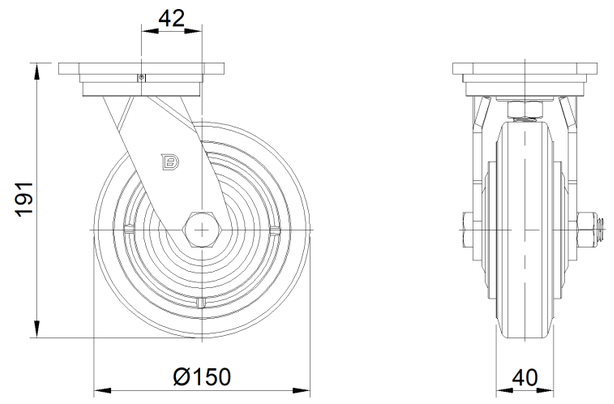

Mounting

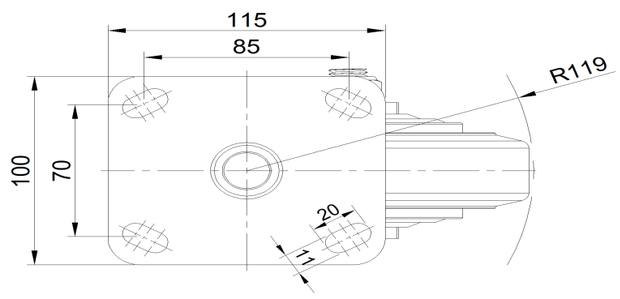

* For any deviation between metric and imperial spec, please refer to the metric spec.

© Copyright 2025 DershengInternational www.dersheng.com