Product Data Sheet

1157 57 Series Caster Series

MRC (Transparent) Wheel Diameter × Wheel Width 150 x 40mm

EAN

KS-11570600074031

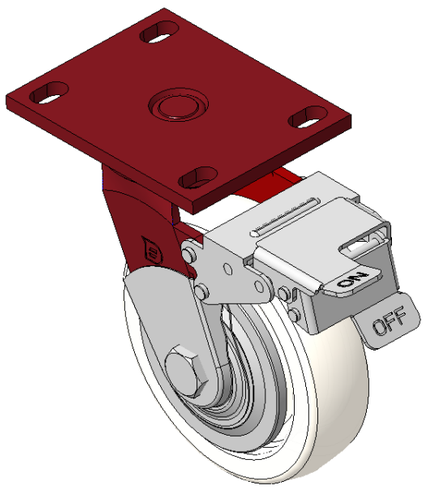

Picture may differ from original product

Equipped with front brake, With locking system Casters, Welded Caster Fork.
Red paint finish, Mounting Type - Top Plate, 110x75mm Bolt Hole Spacing.
Reinforced Polypropylene, natural Wheel Tread color.
Ball Bearing bearings, with specially designed anti-winding wheel caps.

Wheel surface: Thermoplastic (PA6)
Wheel Center: Thermoplastic (PA6)

Drawings are for reference only and may differ from the product

Technical Data

◉ Metric ○ Imperial

Wheel Diameter	150mm
Wheel Width	40mm
Wheel Bearing	Wheels With Ball Bearings
Plate Size	138 x 108mm
Bolt Hole Spacing	110x75mm
Plate Hole	22 x 13mm
Offset	42mm
Swivel Interference	320mm
Overall Height	197mm
Swivel Radius	160mm
Hardness Of Tread	75±5° Shore D
Load Capacity (Dynamic)	400kgs
Load Capacity (Static)	600kgs
Temperature	-20°C to +80°C
Fork Type	Swivel Caster With Front Brake
Stainless	N/A
Electrical Conductivity	N/A
Anti-Static	N/A
Weight	3.50kgs
Standard	ISO22883

Advantages at a glance

Rolling Resistance	● ● ● ● ●
Operating Noise	● ● ○ ○ ○
Floor Surface Preservation	● ● ○ ○ ○

Dimensions

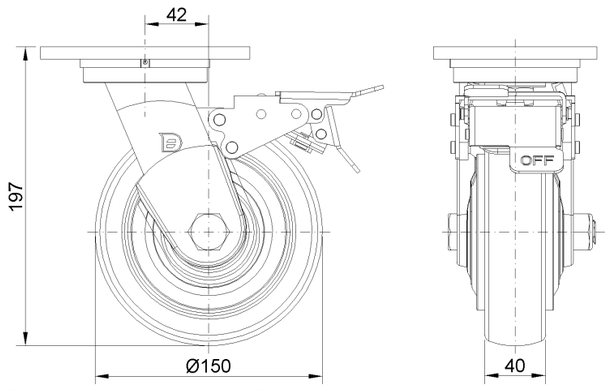

Mounting

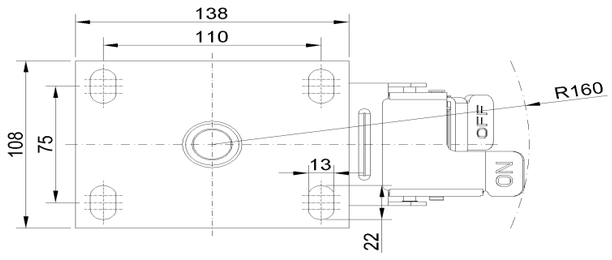

* For any deviation between metric and imperial spec, please refer to the metric spec.

© Copyright 2026 DershengInternational www.dersheng.com